UNCLASSIFIED

AD NUMBER

AD859286

NEW LIMITATION CHANGE

TO

Approved for public release, distribution unlimited

FROM

Distribution authorized to U.S. Gov't. agencies and their contractors; Administrative/Operational Use; APR 1969. Other requests shall be referred to Naval Air Systems Command, Washington, DC.

AUTHORITY

USNASC ltr, 26 Oct 1971

THIS PAGE IS UNCLASSIFIED

Report No. MSD-P69-144

Contract No. 00019-68-C-0247

AD859286

COLLOCATION FLUTTER ANALYSIS STUDY

This document is subject to special export controls and transmittal to foreign governments or foreign nationals may be made only with prior approval of the Naval Air Systems Command (AIR-~~53214~~ 6122).

VOLUME II.

FLUENC - COMPUTER PROGRAM TO CALCULATE STRUCTURAL INFLUENCE COEFFICIENTS

APRIL 1969

DDC
SEP 25 1969

MISSILE SYSTEMS DIVISION
HUGHES
HUGHES AIRCRAFT COMPANY

C O F A

C O L L O C A T I O N F L U T T E R A N A L Y S I S

S T U D Y

VOLUME II

FLUENC - Computer Program to Calculate
Structural Influence Coefficients

Prepared by the Dynamics and Environment
Section Personnel, Hughes Aircraft Company
Under Contract No. 0019-68-C-0247

April 1969

This document is subject to special export controls and transmittal to foreign governments or foreign nationals may be made only with prior approval of the Naval Air Systems Command [redacted]

ABSTRACT

A displacement solution for the calculation of structural influence coefficients (SIC's) is presented. The formulation utilizes the lumped parameter approach that is consistent with collocation flutter solutions. The structure is synthesized as concentrated mass elements connected by massless elastic plates and/or beams. There are two methods of generating the mass matrix; they are: 1) lumped concentrated mass points, 2) consistent mass matrices. Along with the calculation of the SIC's, the natural vibration modes and frequencies are calculated. There are two options for punching out the flexibility matrix for use in subsequent COFA computer programs. Option 1, punches out the full flexibility matrix; Option 2, punches out the reduced flexibility matrix eliminating the rows and columns pertaining to structural attach points.

TABLE OF CONTENTS

		Page
	ABSTRACT	ii
	TABLE OF CONTENTS	i
1.0	INTRODUCTION	1
2.0	NOMENCLATURE	2
3.0	TECHNICAL DISCUSSION	3
	3.1 Influence Coefficients	3
	3.2 Mass Matrix	12
	3.3 Modes and Frequencies	15
4.0	PROGRAM DESCRIPTION	17
	4.1 Description of Program Input	17
	4.2 Description of Program Output	22
	4.3 Sample Problems	22
	4.4 Processing Requirements	23
	4.5 Program Listing and Flow Chart	23
REFERENCES		29
APPENDICES		
	APPENDIX A Three Sample Problems - Input and Output	30
	APPENDIX B Program FLUENC Listing	81
	APPENDIX C Program FLUENC Flow Chart	126
	APPENDIX D Symbol List	189
TABLES		
	1. Beam Stiffness Matrix	25
	2. Triangular Plate Matrix	26
	3. Beam Consistent Mass Matrix	27

1.0 INTRODUCTION

In order to determine the aeroelastic behavior of a wing or control surface, it is necessary to know the aerodynamics, elastic properties and mass distributions of the structure. The overall aeroelastic analysis is usually divided into four separate parts as shown in Figure 1.

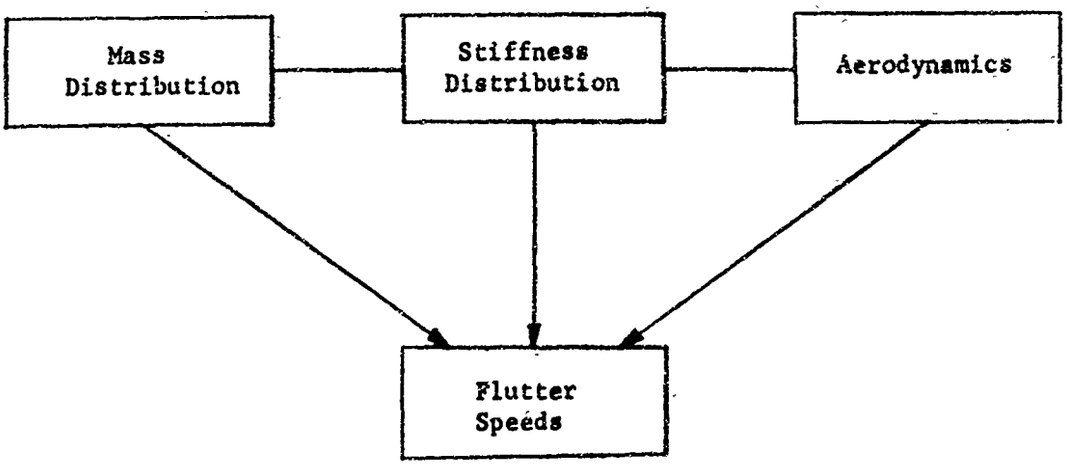

Figure 1. Analysis Procedure

This portion of the report describes the computation of the mass and stiffness distribution. The geometry of a wing or tail surface is too complex for the successful use of closed form analytical techniques. Therefore, a numerical type of analysis must be used. The end product of this analysis is the generation of overall influence coefficient and mass matrices referred to a set of node points arbitrarily picked on the surface of the structure. The finite element method (see Refs. 2 and 3) was used to form the required matrices for a planar structure. This technique is especially suited to solve complex structures and as used in the analysis is general enough to handle the following:

1. Combinations of beam and plate elements
2. Arbitrary boundary conditions
3. Lumped or distributed stiffnesses and masses

A discussion of the theory and computer program which calculates the influence coefficient and the mass matrix as well as the structural modes and frequencies is given in the following sections.

2.0 NOMENCLATURE

C	=	Unknown Boundary Constants
D	=	Plate Ridigity Constant
E	=	Modulus of Elasticity
F	=	Force
K	=	Stiffness Coefficients
M	=	Bending/Torsional Moment
p	=	Pressure
T	=	Coordinate Transformation
t	=	Thickness
w	=	Linear Displacement in z direction
x, y, z	=	Coordinate Axes
s	=	Linear Displacement
$\frac{d^2(\ )}{d(\ )^2}$	=	Curvature
ρ	=	Density
σ	=	Stress
ν	=	Poisson's Ration
$\frac{\partial(\ )}{\partial(\ )}$	=	Partial Derivative
$[\ ]$	=	Square Matrix
$\{\ \}$	=	Column Matrix
$[\ ]$	=	Row Matrix

3.0 TECHNICAL DISCUSSION

3.1 Influence Coefficients

The stiffness method approach is first used to obtain an overall stiffness matrix of the structure. This matrix is reduced by partitioning and then inverted to obtain the influence coefficients at any desired set of control points. The number of control points are denoted by N. At each node, three degrees of freedom are specified: two rotations and the normal displacement. Therefore, a stiffness matrix of approximately 3N degrees of freedom is first formed by superimposing individual plate and plane grid beam element global coordinate matrices. The matrix will be somewhat smaller than 3N degrees of freedom since boundary restraint conditions will reduce the size of the matrix. To illustrate the matrix condensation method used in the computer program, we will assume that we have N control point normal displacements and M displacements which must be eliminated. The overall stiffness matrix is given as

$$[K] = \begin{bmatrix} K_{NN} & K_{NM} \\ K_{MN} & K_{MM} \end{bmatrix} \tag{1}$$

The structural equilibrium matrix equation can be written as

$$\begin{bmatrix} K_{NN} & K_{NM} \\ K_{MN} & K_{MM} \end{bmatrix} \begin{Bmatrix} \delta_N \\ \delta_M \end{Bmatrix} = \begin{Bmatrix} F_N \\ F_M \end{Bmatrix} \tag{2}$$

We now assume that forces at the points to be eliminated are small and can be neglected. Therefore,

$$\begin{bmatrix} K_{NN} & K_{NM} \\ K_{MN} & K_{MM} \end{bmatrix} \begin{Bmatrix} \delta_N \\ \delta_M \end{Bmatrix} = \begin{Bmatrix} F_N \\ 0 \end{Bmatrix} \tag{3}$$

or

$$[K_{NN}]\{\delta_N\} + [K_{NM}]\{\delta_M\} = \{F_N\}$$

and

$$[K_{MN}]\{\delta_N\} + [K_{MM}]\{\delta_M\} = \{0\}$$

Therefore

$$\{\delta_M\} = -[K_{MM}]^{-1}[K_{MN}]\{\delta_N\} \tag{3a}$$

and

$$\left([K_{NN}] - [K_{NM}][K_{MM}]^{-1}[K_{MN}]\right)\{\delta_N\} = \{F_N\}$$

and since

$$[K_{MN}]^T = [K_{NM}]$$

we have

$$\{\delta_N\} = \left([K_{NN}] - [K_{MN}]^T[K_{MM}]^{-1}[K_{MN}]\right)^{-1}\{F_N\} \tag{4}$$

If we now let

$$[f_{NN}] = \left([K_{NN}] - [K_{MN}]^T[K_{MM}]^{-1}[K_{MN}]\right)^{-1}$$

then Equation (4) can be written as

$$\{\delta_N\} = [f_{NN}]\{F_N\} \tag{5}$$

The matrix $[f_{NN}]$ is called the structural influence coefficient matrix. The application of loads at the control points yield displacements at the control points by carrying out the matrix multiplication indicated in Equation (5).

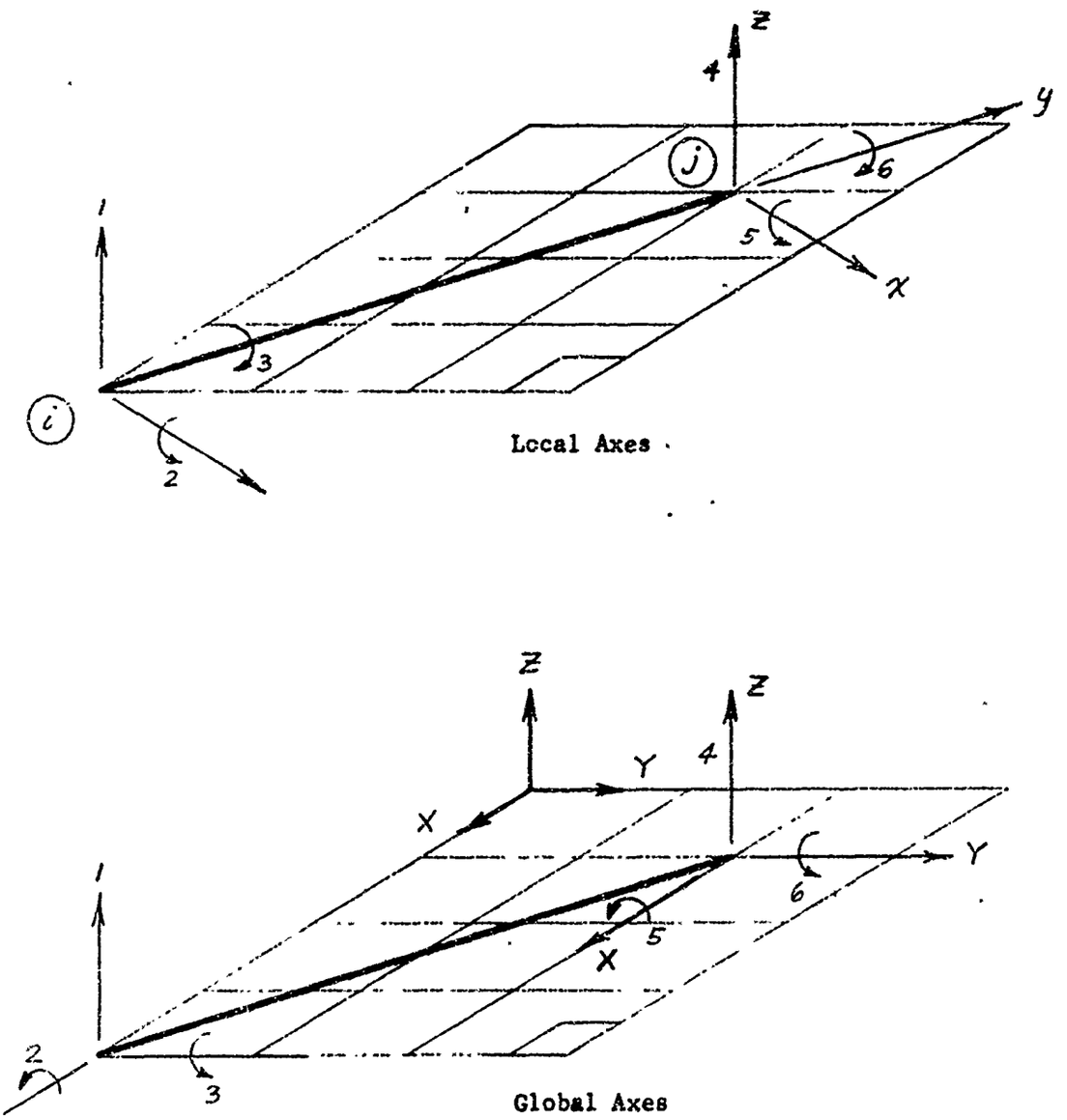

Figure 2. Plane Grid Beam Local and Global Coordinate System

The computer program FLUENC carries out the required operations to obtain the influence coefficient matrix $\left[f_{NN}\right]$. A detailed description of the program can be found in Section 4.0. The program is written to form a 50 x 50 influence coefficient matrix. The influence coefficient matrix is punched out on cards in a format compatible with the Collocation Flutter Program.

The plane grid beam global coordinate stiffness matrix used in the program was obtained from Reference 1 and is given in Table 1. The local and global coordinate systems are shown in Figure 2. The figure also contains the sign convention for the six degrees of freedom for each element.

The triangular plate stiffness matrix given in Reference 2 was used in the computer program. The plate element can be materially or geometrically orthotropic as treated in Reference 3. Stiffened plates can be considered to be geometrically orthotropic. The sign convention and nodal degrees of freedom are shown in Figure 3.

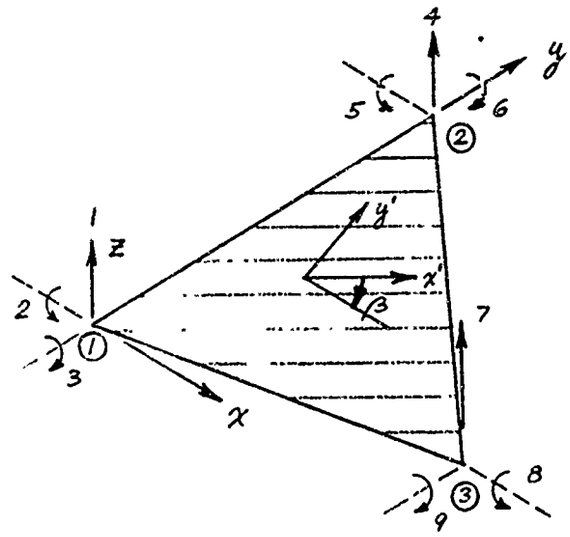

z' parallel to z

x', y' - follows principal axes of material

β - angle between x' and x axes

Figure 3. Orthotropic Triangular Element

Following the analysis given in Reference 2, the deflection shape of the plate element is assumed to be of the form

$$w = C_1 + C_2 x + C_3 y + C_4 x^2 + C_5 xy + C_6 y^2 + C_7 x^3 + C_8 (xy^2 + x^2 y) + C_9 y^3$$

or

$$w = [N]\{C\} \tag{6}$$

The unknown constants C_1, C_2, ---, C_9 can be written in terms of the nodal displacements δ_1, δ_2, ---, δ_9 by using the boundary conditions

at $x = 0,\ y = 0$

$$\begin{cases} w = \delta_1 \\ \partial w/\partial y = \delta_2 \\ \partial w/\partial x = -\delta_3 \end{cases}$$

at $x = 0,\ y = y_2$

$$\begin{cases} w = \delta_4 \\ \partial w/\partial y = \delta_5 \\ \partial w/\partial x = -\delta_6 \end{cases} \tag{7}$$

at $x = x_3,\ y = y_3$

$$\begin{cases} w = \delta_7 \\ \partial w/\partial y = \delta_8 \\ \partial w/\partial x = -\delta_9 \end{cases}$$

Using Equation (6) in conjunction with the boundary conditions given by Equation (7) yields

$$\begin{Bmatrix} \delta_1 \\ \delta_2 \\ \delta_3 \\ \delta_4 \\ \delta_5 \\ \delta_6 \\ \delta_7 \\ \delta_8 \\ \delta_9 \end{Bmatrix} = \begin{bmatrix} & & \\ & C & \\ & & \end{bmatrix} \begin{Bmatrix} C_1 \\ C_2 \\ C_3 \\ C_4 \\ C_5 \\ C_6 \\ C_7 \\ C_8 \\ C_9 \end{Bmatrix} \tag{8}$$

where $C =$

$$\begin{bmatrix}
1 & 0 & 0 & 0 & 0 & 0 & 0 & 0 & 0 \\
0 & 0 & 1 & 0 & 0 & 0 & 0 & 0 & 0 \\
0 & -1 & 0 & 0 & 0 & 0 & 0 & 0 & 0 \\
1 & 0 & y_2 & 0 & 0 & y_2^2 & 0 & 0 & y_2^3 \\
0 & 0 & 1 & 0 & 0 & 2y_2 & 0 & 0 & 3y_2^2 \\
0 & -1 & 0 & 0 & -y_2 & 0 & 0 & -y_2^2 & 0 \\
1 & x_3 & y_3 & x_3^2 & x_3y_3 & y_3^2 & x_3^3 & x_3y_3^2+x_3^2y_3 & y_3^3 \\
0 & 0 & 1 & 0 & x_3 & 2y_3 & 0 & 2x_3y_3+x_3^2 & 3y_3^2 \\
0 & -1 & 0 & -2x_3 & -y_3 & 0 & -3x_3^2 & -(y_3^2+2x_3y_3) & 0
\end{bmatrix}$$

The constant vector $\{c\}$ can be obtained in terms of the nodal displacements by inverting the matrix $[C]$. Therefore,

$$\{c\} = [C]^{-1}\{\delta\} \tag{9}$$

The curvatures for a flat plate element are given by

$$\{\epsilon\} = \begin{Bmatrix} \epsilon_x \\ \epsilon_y \\ \epsilon_{xy} \end{Bmatrix} = -\begin{Bmatrix} \partial^2 w/\partial x^2 \\ \partial^2 w/\partial y^2 \\ 2\,\partial^2 w/\partial x \partial y \end{Bmatrix} \tag{10}$$

Substituting Equation (6) into Equation (10) yields

$$\{\epsilon\} = [Q]\{c\} \tag{11}$$

where

$$[Q] = \begin{bmatrix}
0 & 0 & 0 & -2 & 0 & 0 & -6X & -2Y & 0 \\
0 & 0 & 0 & 0 & 0 & -2 & 0 & -2Z & -6Y \\
0 & 0 & 0 & 0 & -2 & 0 & 0 & -(4X+4Y & 0
\end{bmatrix}$$

Substituting Equation (9) into Equation (11) yields

$$\{\epsilon\} = [\,\,][C]^{-1}\{\delta\} = [B]\{\delta\} \tag{12}$$

If initial strains are neglected then the moment-curvature relationships can be written in the form

$$\{\sigma\} = \begin{Bmatrix} M_x \\ M_y \\ M_{xy} \end{Bmatrix} = [D]\{\epsilon\} \tag{13}$$

where

$$[D] = \begin{bmatrix} D_x & D_1 & 0 \\ D_1 & D_y & 0 \\ 0 & 0 & D_{xy} \end{bmatrix} \tag{14}$$

for a materially or geometrically orthotropic plate. For an isotropic plate Equation (14) reduces to

$$[D] = \frac{E t^3}{12(1-\nu^2)} \begin{bmatrix} 1 & \nu & 0 \\ \nu & 1 & 0 \\ 0 & 0 & \frac{1-\nu}{2} \end{bmatrix} \tag{15}$$

The $[D]$ matrix must undergo a transformation if the principal axes of the material do not coincide with the local coordinate axes. The components of strain in one coordinate axes system are related to the components of strain in another coordinate axes system by the matrix equation

$$\{\epsilon'\} = [T]^T\{\epsilon\} \tag{16}$$

(The prime refers to the components of strain referred to the x'-y' axes in Figure 3)

where

$$[T]^T = \begin{vmatrix} \cos^2\beta & \sin^2\beta & -2\sin\beta\cos\beta \\ \sin^2\beta & \cos^2\beta & 2\sin\beta\cos\beta \\ \sin\beta\cos\beta & -\sin\beta\cos\beta & \cos^2\beta - \sin^2\beta \end{vmatrix} \tag{17}$$

Since the internal work is constant no matter which coordinate system is used

$$\{\sigma'\}^T\{\epsilon'\} = \{\sigma\}^T\{\epsilon\} \tag{18}$$

or by Equation (13)

$$\{\epsilon'\}^T[D']\{\epsilon'\} = \{\epsilon\}^T[D]\{\epsilon\}$$

and by using Equation (16)

$$\{\epsilon\}^T[T][D'][T]^T\{\epsilon\} = \{\epsilon\}^T[D]\{\epsilon\}$$

Therefore

$$[D] = [T][D'][T]^T . \tag{19}$$

The stiffness matrix for a typical element ① ② ③ is given by

$$[K] = \iint_A [B]^T[D][B]\, dx\, dy \tag{20}$$

or by Equations (12) and (19)

$$[K] = [C^{-1}]^T\left(\iint_A [Q]^T[T][D'][T]^T[Q]\, dx\, dy\right)[C]^{-1} \tag{21}$$

Now let

$$[\bar{D}] = \iint_A [Q]^T[T][D'][T]^T[Q]\, dx\, dy$$

and carrying out the indicated matrix multiplications yields

$$[\bar{D}] = \iint_A (\text{see Table } 1)\, dx\, dy \tag{22}$$

In order to simplify the integration required for evaluating the matrix in Equation (22), it is suggested in Reference 2 that the independent variables be changed as shown in Figure 4.

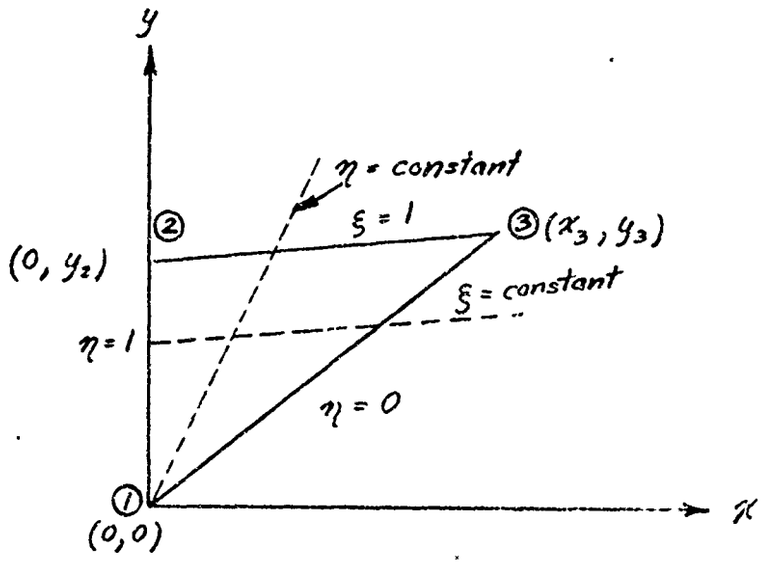

Figure 4
Coordinate Transformation

The relationships

$$x = \xi (1 - \eta) x_3$$
$$y = \xi [(1 - \eta) y_3 + \eta y_2] \tag{23}$$

are used for the change of variables. The terms in Equation (22) can now be evaluated by using the relationship

$$I (x^m, y^n) = \iint x^m y^n \, dx \, dy$$

or

$$I (x^m, y^n) = \iint x^m y^n \left| J (x, y) \right| d\xi \, d\eta \tag{24}$$

where

$$J (x, y) = \begin{vmatrix} \frac{\partial x}{\partial \xi} & \frac{\partial x}{\partial \eta} \\ \frac{\partial y}{\partial \xi} & \frac{\partial y}{\partial \eta} \end{vmatrix} \tag{25}$$

Substituting Equation (23) into Equation (25) yields

$$J(x,y) = \xi x_3 y_2 \tag{26}$$

Substituting Equations (23) and (26) into Equation (24) yields

$$I(x^m, y^n) = \int_0^1 \int_0^1 \xi^{m+n+1} (1-\eta)^m [(1-\eta) y_3 + \eta y_2]^n x_3^{m+1} y_2 \, d\xi \, d\eta \tag{27}$$

which can easily be evaluated for any m and n.

3.2 Mass Matrix

D'Alenbert's principle can be used for the formulation of the mass matrix. If masses are attached to the nodes of the structure, then the nodal dynamic forces are

$$\{P\} = -[M] \frac{d^2\{\delta\}}{dt^2} \tag{28}$$

where

$$[M] = \begin{bmatrix} M_1 & & 0 \\ & M_2 & \\ 0 & & M_n \end{bmatrix} \tag{29}$$

is a diagonal matrix. The mass of beam and plate elements are usually distributed throughout the structure. Therefore, the distributed pressure loading can be written in the form

$$p = -\rho \frac{d^2 w}{dt^2} \tag{30}$$

Substituting Equations (6) and (9) into Equation (30) yields

$$p = -\rho [N][C]^{-1} \{\ddot{\delta}\}$$

or

$$p = -\rho [R] \{\ddot{\delta}\} \tag{31}$$

where

$$[R] = [N][C]^{-1}$$

Since the equivalent element nodal forces can be computed from the equation

$$\{P\}^e = -\int_V [R]^T p \, dV \tag{32}$$

then

$$\{P\}^e = \left\{ \int_V [R]^T [R] \rho \, dV \right\} \{\ddot{\delta}\} \tag{33}$$

Therefore the elemental consistent mass matrix is given by

$$[m]^e = \int [R]^T [R] \rho \, dV \tag{34}$$

The consistent mass matrices given in Reference 2 (see Tables 3 and 4) are used in the computer program.

Once the elemental consistent mass and/or lumped mass matrices are computed, then the overall matrix is obtained by following the same technique as used in assembling the overall stiffness matrix.

The overall mass matrix is reduced by using Equation (3a). We again assume that we have N control point normal displacements and M displacements which must be eliminated. The overall mass matrix can be written in the form

$$[M] = \begin{bmatrix} M_{NN} & M_{NM} \\ M_{MN} & M_{MM} \end{bmatrix} \tag{35}$$

and the displacements

$$\{\delta\} = \begin{Bmatrix} \delta_N \\ \delta_M \end{Bmatrix} \tag{36}$$

From Equation (3a) we have

$$\{\delta_M\} = -[K_{MM}][K_{MN}]\{\delta_N\} \tag{3a}$$

Since the virtual work of the reduced mass system must equal the virtual work of the true mass system

$$-\{\Delta\delta_N\}^T[M_r]\{\ddot{\delta}_N\} = -\{\Delta\delta\}^T[M]\{\ddot{\delta}\} \tag{37}$$

where

$\{\Delta\delta_N\}$ = virtual displacements of control points

$\{\Delta\delta\}$ = virtual displacements of complete system

$[M_r]$ = overall reduced mass matrix

Equation (37) can be rewritten in the form

$$\{\Delta\delta_N\}^T[M_r]\{\ddot{\delta}_N\} = [\Delta\delta_N^T \quad \Delta\delta_M^T][M]\begin{Bmatrix}\delta_N\\ \delta_M\end{Bmatrix} \tag{38}$$

Substituting Equation (3a) into Equation (38) yields

$$\{\Delta\delta_N\}^T[M_r]\{\ddot{\delta}_N\} = \{\Delta\delta_N\}^T\left[I \quad -[K_{NM}][K_{MM}]^{-1}\right][M]\begin{bmatrix} I \\ -[K_{MM}]^{-1}[K_{MN}]\end{bmatrix}\{\ddot{\delta}_N\}$$

which yields the result

$$[M_r] = \left[I \quad -[K_{NM}][K_{MM}]^{-1}\right][M]\begin{bmatrix} I \\ [K_{MM}]^{-1}[K_{MN}]\end{bmatrix} \tag{39}$$

The reduced mass matrix given by Equation (39) is calculated in the computer program.

3.3 Modes and Frequencies

Since the design engineer may find it useful to know the mode shapes and natural frequencies of the structure, this information can be obtained by using the NMØDE option in the computer program. If no external forces are present then the reduced mass and influence coefficient matrices are related to one another by the relationship

$$\left[f_{NN}\right]^{-1}\left\{\delta_N\right\} = -\left[M_r\right]\left\{\ddot{\delta}_N\right\} \tag{40}$$

For determining natural frequencies, the deflections $\left\{\delta_N\right\}$ can be written as

$$\left\{\delta_N\right\} = \left\{\delta_o\right\} \sin \omega t \tag{41}$$

Substituting Equation (41) into Equation (40) yields

$$\left[f_{NN}\right]^{-1}\left\{\delta_o\right\} = \omega^2\left[M_r\right]\left\{\delta_o\right\} \tag{42}$$

The solution of Equation (42) yields the natural frequencies, ω, and the mode shapes $\left\{\delta_o\right\}$. Since $\left[f_{NN}\right]^{-1}$ and $\left[M_r\right]$ are both symmetrical matrices, the mass matrix $\left[M_r\right]$ can be triangularized

$$\left[M_r\right] = \left[L\right]\left[L\right]^T \tag{43}$$

where

$$\left[L\right] = \begin{bmatrix} \ell_{11} & 0 & 0 & \cdots & 0 \\ \ell_{21} & \ell_{22} & 0 & & \\ \vdots & & \ell_{33} & \ddots & \vdots \\ & & & & 0 \\ \ell_{n1} & \cdots & & & \ell_{nn} \end{bmatrix}$$

Substituting Equation (43) into Equation (42) yields

$$\left[f_{NN}\right]^{-1}\left\{\delta_o\right\} = \omega^2\left[L\right]\left[L\right]^T\left\{\delta_o\right\}$$

$$[L]^{-1}[f_{NN}]^{-1}\{\delta_o\} = \omega^2[L]^T\{\delta_o\} \tag{44}$$

Since

$$[L^T]^{-1}[L^T] = [I]$$

Equation (44) may be written

$$[L]^{-1}[f_{NN}]^{-1}[L^T]^{-1}[L]^T\{\delta_o\} = \omega^2[L]^T\{\delta_o\} \tag{44a}$$

or

$$[A]\{\bar{\delta}_o\} = \omega^2\{\delta_o\} \tag{45}$$

where $$[A] = [L]^{-1}[f_{NN}]^{-1}[L^T]^{-1}$$

$$\{\bar{\delta}_o\} = [L]^T\{\delta_o\}$$

An eigenvalue subroutine using the Givens method was used in the computer program package to solve Equation (45). The Givens method is fully described in Reference 4.

Note that the dynamical matrix [A] in the form described above is real and symmetric which is required by the Givens method. Conveniently, [L] and $[L^T]$ are in triangular form which is used in the computer program package to save core storage space.

4.0 PROGRAM DESCRIPTION

Computer program FLUENC written in FORTRAN IV carries out the operations set forth in Section 3.0 for generating the structural influence coefficients and mass matrices required by the Collocation Flutter Program. Briefly, the structure is assumed to be representable by a planar network of beams and triangular plate elements connected at discrete joints. At each joint, if there are no restraints, the program assumes three degrees of freedom; that is, one displacement normal to the plane of the structure and two rotations. The program first synthesizes the stiffness and mass matrices for the entire structure including all degrees of freedom from the data input for the beam and triangular plate elements and from the restraint information input for the joints. It then reduces the stiffness and mass matrices by eliminating all the rotational degrees of freedom and leaving only the normal displacements. As a final step, the program inverts the reduced stiffness matrix to obtain the influence coefficients.

Other features of the program include the option to compute lumped masses or to compute the consistent mass matrices for the beam and triangular plate elements or both. Also, the triangular plate elements may have either isotropic or orthotropic properties. There is an additional option to expand the reduced frequency matrix to include the degrees of freedom representing the restraint joint (one joint on a movable surface; two joints on a fixed component). This is accomplished by adding one or two zero rows and columns to the reduced flexibility matrix corresponding to the mass numbers of the attach points involved.

In the sections that follow detailed instructions are given for the preparation of input data and a description is given of the output illustrated with several sample problems. Also included are listings and flow charts of the program and a discussion of the processing requirements.

4.1 Description of Program Input

The following instructions describe the input data, their physical units, and the FORTRAN format they must be punched with. The input quantities' names, all in capitals, are their FORTRAN names and, for reference, their equivalent names in Section 3.0 are listed in Appendix D.

4.1.1 Title Card, format (12A6)

Two cards; any alphanumeric statement in columns 1 to 72.

4.1.2 Problem Size and Control Information, format (7I5)

Column	1 - 5	6 - 10	11 - 15	16 - 20	21 - 25	26 - 30	31 -
Name	NJTS	NR	NBE	NPE	NMØDE	MKEY	NLUMP

NJTS = number of joints in structure (50 maximum)

NR = number of joints with one or more restraints

NBE = number of beam elements in structure

NPE = number of triangular plate elements in structure

NMØDE = number of eigenvalues and eigenvectors desired (9 maximum)

MKEY = 1. do not compute consistent mass terms for beam and/or triangular plate elements

= 2. compute consistent mass terms for beam and/or triangular plate elements

NLUMP = number of lumped masses input. Only lumped masses corresponding to the normal displacement at each joint may be input.

4.1.3 Material Properties

(a) Number of Materials, format (I5)

Column	1 - 5
Name	NMAT

NMAT = number of materials for which properties are input (10 max.)

(b) Properties, format (4E10.3)

Input NMAT number of cards, one for each material.

Column	1 - 10	11 - 20	21 - 30	31 - 40
Name	YM(i)	PR(i)	GE(i)	DENS(i)

YM(i) = Young's modulus of elasticity divided by 10^6; psi

PR(i) = Poisson's ratio

GE(i) = modulus of rigidity; psi. If input as 0., it will be computed from the following formula:

$$GE(i) = \frac{YM(i)}{2\left[1 + PR(i)\right]}$$

DENS(i) = material density; lb/in^3. Not required if MKEY = 1

4.1.4 Joint Coordinate Cards, format (10X, 2E10.3)

Input NJTS number of cards, one for each joint. Also, the structure is assumed to lie in the x-y plane.

Column	1 - 10	11 - 20	21 - 30
Name	m	X(m)	Y(m)

m = joint number (must be input consecutively starting with 1). May be placed anywhere between columns 1 and 10

X(m) = x coordinate of joint m; inches

Y(m) = y coordinate of joint m; inches

4.1.5 Joint Restraint Information, format (4I5)

Input NR number of cards, one for each joint with one or more restraints.

Column	1 - 5	6 - 10	11 - 15	16 - 20
Name	JT	M1	M2	M3

JT = number of joint having one or more restraints

M1 = 0 free in the z direction

= 1 fixed in the z direction

M2 = 0 free to rotate about the x axis

= 1 fixed about the x axis

M3 = 0 free to rotate about the y axis

= 1 fixed about the y axis

4.1.6 Lumped Masses, format (I5, 5X, E10.3)

Input NLUMP number of cards, one for each lumped mass.

Column	1 - 5	6 - 10	11 - 20
Name	JMASS	blank	RSMASS

JMASS = number of joint for which lumped mass is input

RSMASS = lumped mass, lb.

If more than one lumped mass is input for a particular joint, the program will sum the masses.

4.1.7 Beam Element Properties, format (3E10.3, 3I5)

Input NBE number of cards, one for each beam element.

Column	1 - 10	11 - 20	21 - 30	31 - 45	36 - 40	41 - 45
Name	AR	XI	YJ	MAT	JTNR	JTFR

AR = area of beam cross section, in^2

XI = moment of inertia of area, in^4

YJ = effective torsional moment of inertia, in^4

MAT = material code corresponding to one of the materials input under paragraph 4.1.3.

JTNR, JTFR = joint numbers at the ends of the beam element

4.1.8 Triangular Plate Element Properties, format (E10.3, 5I5)

Input NPE number of cards, one for each triangular plate element.

Column	1 - 10	11 - 15	16 - 20	21 - 25	26 - 30	31 - 35
Name	PTH	MAT	JT1	JT2	JT3	NDX

PTH = plate thickness, in.

MAT = material code corresponding to one of the materials input under paragraph 4.1.3

JT1, JT2, JT3 = joint numbers at the three corners of the triangular plate

Restrictions:

a) The order of the joint numbers must be given in a clockwise manner as follows:

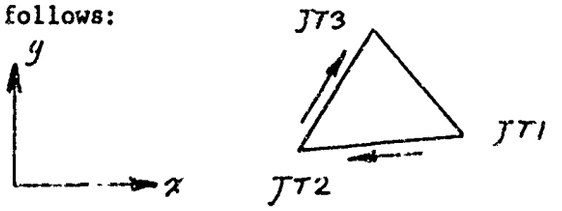

b) The angle formed by the edges of the triangular plate at JT1 must not be 90^0.

NDX = 0 the plate has isotropic properties and the flexural rigidity terms are computed from

$$DX = DY = \frac{YM(MAT) \times PTH^3}{12\left\{1 - [PR(MAT)]^2\right\}}$$

$$D1 = \left[PR(MAT)\right] \times DX$$

= 1 the plate has orthotropic properties and the flexural rigidity terms are input by the next card [format (4E10.3)]

Column	1 - 10	11 - 20	21 - 30	31 - 40	41 - 50
Name	DX	DY	D1	DXY	BETA

DX, DY, D1, DXY = flexural rigidity terms, in.lb.

BETA = angle between material principal axes and the triangular plate local coordinates as shown below

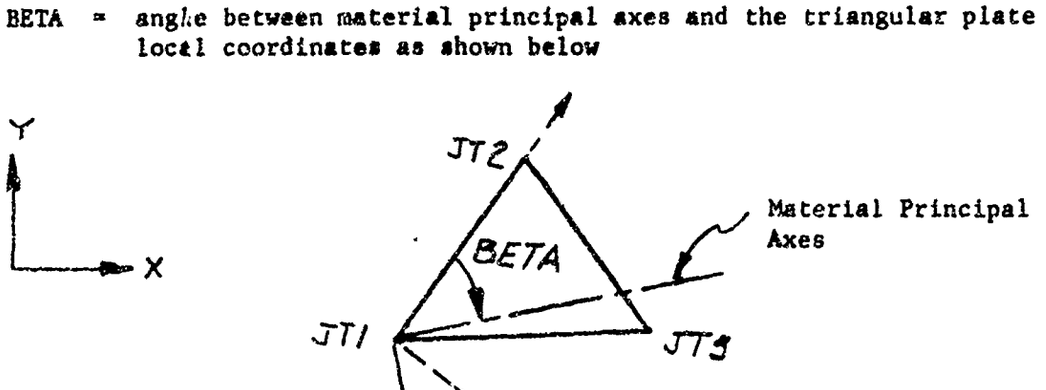

4.1.9 Option to Expand Reduced Flexibility Matrix

Note: The following card (NCOD) is always required at the end of all input data for any one particular case, whether or NOT the option is to be executed.

FORMAT (1I6)

Column	1-6	
Name	NCOD	
Item	(1)	

NCOD = 0 Option not executed

= 1 Option executed

If NCOD = 1, the following card is required

FORMAT (3I8)

Column	1-8	9-16	17-24
Name	NR	NNE	NWO
Item	(1)	(2)	(3)

NR = Number of boundary points used (1 or 2)
NNE = Mass number of first attach point
NWO = Mass number of second attach point, if NR = 2
NWO = 0 or left blank if NR = 1

To input more than one problem, the user need only repeat the cards in paragraph 4.1.1 through 4.1.8 for each additional problem.

4.2 Description of Program Output

The program prints out all the input data for every problem followed by the solution consisting of the reduced upper right triangular stiffness (lb/in), flexibility (in/lb) and weight (lb) matrices as well as the modes and frequencies when these are requested on the card in paragraph 4.1.2. The stiffness, flexibility, and mass matrices that are printed/punched out only contain terms that are associated with the normal displacement "z". This is done so that when the flexibility matrix is used in subsequent collocation flutter analyses only the essential degrees of freedom are included in the flutter analyses. Also, the matrices are reduced to eliminate control points associated with fixed points (boundaries). If it is desirable to include the boundary points, it is only necessary to intersperse rows and columns of zero's at the proper place in the matrices. Immediately following the joint restraint information in the output, the program prints out the coordinate numbers assigned by the program to the normal displacements at each unrestrained joint. The elements in all the reduced output matrices are ordered according to these coordinate numbers.

In addition, the program punches out the entire flexibility and weight matrices row by row with the format (1P6E12.5) which is compatible with the input requirements of the Collocation Flutter Program. Each punched matrix is identified by a little card as the first card.

4.3 Sample Problems

To illustrate the use of program FLUENCE, three sample problems are included in Appendix A. Each sample problem starts with a problem statement and is followed by a listing of the input data and the output of the program. The first sample problem is a simply supported uniform beam composed of five beam segments. The second is a uniform cantilever plate divided into 72 triangular plate elements, and the third is a lumped mass and beam network simulating a missile control surface.

4.4 Processing Requirements

Program FLUENCE has been run on the GE-635 computer and it required about 31,000 cells of core storage. It is expected that the program storage requirement will be about the same on other digital computers. In addition to using the input and output files, 05 and 06, which are standard for the GE-635 computer, the program requires six other peripheral files, five of which are designated in the program by the numeric codes 07, 08, 19, 10 and 11, and the sixth is the card punch file.

There is no general formula for determining the run time required for a problem, but if a GE-635 computer is used, an estimate may be made from the times required for the three sample problems in Appendix A, which are as follows:

Sample Problem No.	No. of Joints	No. of Beam Elements	No. of Plate Elements	Consistent Masses Computed	Lumped Masses Input	No. of Modes & Freqs Computed	Run Time Hr.
1	6	5	0	Yes	No	4	0.0015
2	50	0	72	Yes	No	9	0.0691
3	29	45	0	No	Yes	9	0.0161

4.5 Program Listing and Flow Chart

In the event future changes are needed in the program, a listing of the program is included in Appendix B. The program consists of a MAIN deck, 24 subroutines and one function subprogram. MAIN has the function of reading in data, numbering the coordinates (subroutine CØØRDN), generating the codes for assembling the stiffness and weight matrices and calling the subroutines which develop the stiffness and mass terms for the beam and triangular plate elements. When the entire stiffness and weight matrices have been established for the whole structure, the MAIN program calls a subroutine which reduces these matrices as discussed before and determines the modes and frequencies as well.

The 24 subroutines and one function subprogram can be divided conveniently into five groups according to their function. The first group consists of those routines that develop the beam stiffness terms; these are TRANS and BEAMK. The second group consists of the routines which determine the beam mass terms; these are TRANS and BEAMM. The third group develops the triangular plate stiffness terms and these are PLATEK, CMAT, MINV, DINMAT, MATMPY, DMAT, DBLINT and PLYMP. The fourth group determines the triangular plate mass terms and these consist of PLATEM, CMAT, MINV, DINMTM, MATMPY, DBLINT and PLYMP. The fifth group of subroutines reduces the stiffness and

and mass matrices, finds the eigenvalues and eigenvectors and outputs the solution. This group is comprised of EIGEN, VIVID, ZRØMAK, ZRØMAM, SYMINV, EIGMAT, BIGMAT, LØØP1, LØØP2, LØØP3 and LØØP4.

Since the program listing is annotated extensively with comment statements, no further explanatory remarks are given here for the program. However, to facilitate the understanding of the interrelationships among the many subroutines, a flow chart of the entire FLUENC program is included in Appendix C.

$\frac{12EI}{L^3}$					
$\frac{6EI}{L^2}m$	$\frac{4EI}{L}m^2+\frac{GJ}{L}\ell^2$		Symmetric		
$-\frac{6EI}{L^2}\ell$	$-\frac{4EI}{L}\ell m+\frac{GJ}{L}\ell m$	$\frac{4EI}{L}\ell^2+\frac{GJ}{L}m^2$			
$-\frac{12EI}{L^3}$	$-\frac{6EI}{L^2}m$	$\frac{6EI}{L^2}\ell$	$\frac{12EI}{L^3}$		
$\frac{6EI}{L^2}m$	$\frac{2EI}{L}m^2-\frac{GJ}{L}\ell^2$	$-\frac{2EI}{L}\ell m-\frac{GJ}{L}\ell m$	$-\frac{6EI}{L^2}m$	$\frac{4EI}{L}m^2+\frac{GJ}{L}\ell^2$	
$-\frac{6EI}{L^2}\ell$	$-\frac{2EI}{L}\ell m-\frac{GJ}{L}\ell m$	$\frac{2EI}{L}\ell^2-\frac{GJ}{L}m^2$	$\frac{6EI}{L^2}\ell$	$-\frac{4EI}{L}\ell m+\frac{GJ}{L}\ell m$	$\frac{4EI}{L}\ell^2+\frac{GJ}{L}m^2$

$$\ell = \frac{X_j - X_i}{L}$$

$$m = \frac{Y_j - Y_i}{L}$$

X_i, Y_i, X_j, Z_j are the global end coordinates of the beam in Figure 2

Table 1. Plane Grid Beam Stiffness Matrix in Global Coordinates

0	0	0	0	0	0	0	0	0
0	0	0	0	0	0	0	0	0
0	0	0	0	0	0	0	0	0
0	0	0	$4D_{11}$	$4D_{12}$	$4D_{13}$	$12D_{11}x$	$4[D_{11}y + D_{12}x + 2D_{13}(x+y)]$	$12D_{12}y$
0	0	0	$4D_{21}$	$4D_{22}$	$4D_{23}$	$12D_{21}x$	$4[D_{21}y + D_{22}x + 2D_{23}(x+y)]$	$12D_{22}y$
0	0	0	$4D_{31}$	$4D_{32}$	$4D_{33}$	$12D_{31}x$	$4[D_{31}y + D_{32}x + 2D_{33}(x+y)]$	$12D_{32}y$
0	0	0	$12D_{11}x$	$12D_{12}x$	$12D_{13}x$	$36D_{11}x^2$	$12x[D_{11}y + D_{12}x + 2D_{13}(x+y)]$	$36D_{12}xy$
0	0	0	$4(D_{11}y + D_{21}x) + 8D_{31}(x+y)$	$4(D_{12}y + D_{22}x) + 8D_{32}(x+y)$	$4(D_{13}y + D_{23}x) + 8D_{33}(x+y)$	$12(D_{11}xy + D_{21}x^2) + 24D_{31}x(x+y)$	$4y[D_{11}y + D_{12}x + 2D_{13}(x+y)] + 4x[D_{21}y + D_{22}x + 2D_{23}(x+y)] + 8(x+y)[D_{31}y + D_{32}x + 2D_{33}(x+y)]$	$12[D_{12}y^2 + D_{22}xy + 2D_{32}(xy + y^2)]$
0	0	0	$12D_{21}y$	$12D_{22}y$	$12D_{23}y$	$36D_{21}xy$	$12y[D_{21}y + D_{22}x + 2D_{23}(x+y)]$	$36D_{22}y^2$

where $[D] = \begin{bmatrix} D_{11} & D_{12} & D_{13} \\ D_{21} & D_{22} & D_{23} \\ D_{31} & D_{32} & D_{33} \end{bmatrix}$

Table 2. Integrand Appearing in Equation 22. Triangular Plate Element

$$[m] = \rho AL$$

$\frac{13}{35} + \frac{6I}{5AL^2}$					
$\frac{11L}{210} + \frac{I}{10AL}$	$\frac{L^2}{105} + \frac{2I}{15A}$		Symmetric		
0	0	$\frac{J}{3A}$			
$\frac{9}{70} - \frac{6I}{5AL^2}$	$\frac{13L}{420} - \frac{I}{10AL}$	0	$\frac{13}{35} + \frac{6I}{5AL^2}$		
$-\frac{13L}{420} + \frac{I}{10AL}$	$-\frac{L^2}{140} - \frac{I}{30A}$	0	$-\frac{11L}{210} - \frac{I}{10AL}$	$\frac{L^2}{105} + \frac{2I}{15A}$	
0	0	$\frac{J}{6A}$	0	0	$\frac{J}{3A}$

Table 3. Consistent Mass Matrix for Beam in Local Coordinates

$$[m] = \rho t [C^{-1}]^T \iint$$

1								
x	x^2							
y	xy	y^2			Symmetric			
x^2	x^3	x^2y	x^4					
xy	x^2y	xy^2	x^3y	x^2y^2			..	
y^2	xy^2	y^3	x^2y^2	xy^3	y^4			
x^3	x^4	x^3y	x^5	x^4y	x^3y^2	x^6		
$xy^2 + x^2y$	$x^2y^2 + x^3y$	$xy^3 + x^2y^2$	$x^3y^2 + x^4y$	$x^2y^3 + x^3y^2$	$xy^4 + x^2y^3$	$x^4y^2 + x^5y$	$(xy^2 + x^2y)^2$	
y^3	xy^3	y^4	x^2y^3	xy^4	y^5	x^3y^3	$xy^5 + xy^4$	y^6

$$dx\,dy\,[C]^{-1}$$

Table 4. Consistent Mass Matrix for Triangular Plate Element in Local Coordinates

References

1. Tezcan, S. S., "Computer Analysis of Plane and Space Structures", Journal of the Structural Division, ASCE, April 1966

2. Przemieniecki, J. S., "Theory of Matrix Structural Analysis", McGraw-Hill Book Co., New York, 1968

3. Zienkiewicz, O. C., "The Finite Element Method in Structural and Continuum Mechanics", McGraw-Hill Publishing Company Limited, London, 1967

4. Bishop, R. E.D, Gladwell, G. M. L., and Michaelson, S., "The Matrix Analysis of Vibration", Cambridge University Press, London, 1965

APPENDIX A

Three Sample Problems - Input and Output

Sample Problem No. 1

Simply Supported Beam

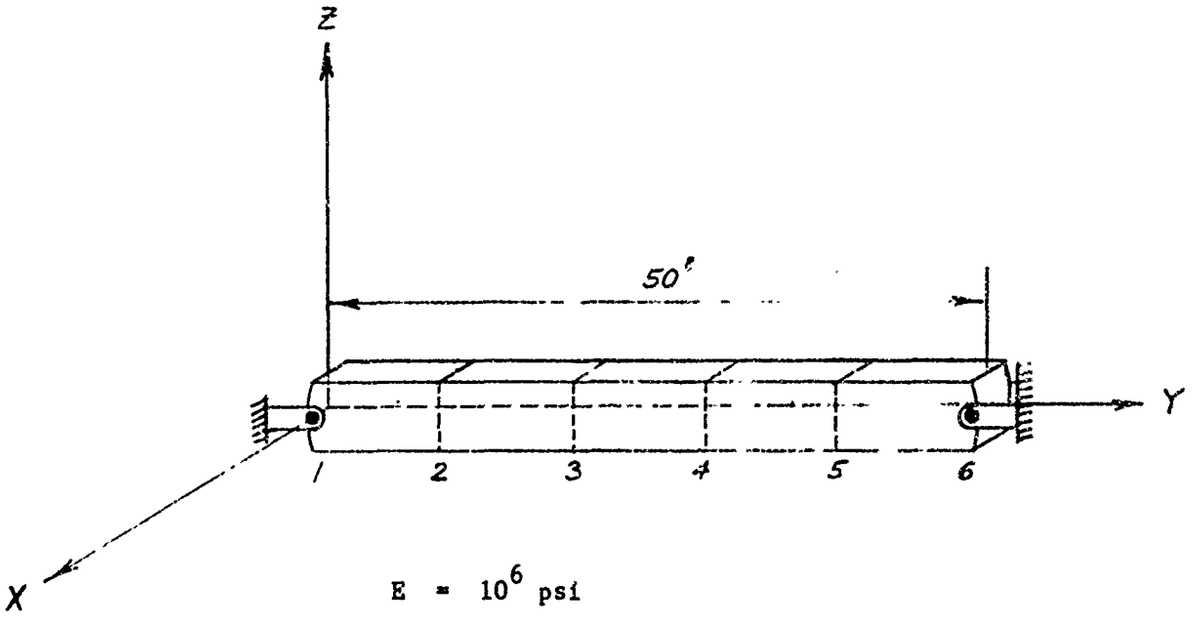

E = 10^6 psi

ν = 0.33

ρ = 0.012 lb/in^3

A = 100 in^2

I = 2 in^4

J = 4 in^4

Calculate first five vibration modes and frequencies using the consistent mass matrix option.

Listing of Input Data Cards

```
SIMPLY SUPPORTED BEAM WITH 6 JOINTS
AUGUST 1968
    6    2    5    0    4    2
    1
1.        0.33      0.        0.012
    1     0.        0.
    2     0.        10.
    3     0.        20.
    4     0.        30.
    5     0.        40.
    6     0.        50.
    1     1    0    1
    2     1    0    1
100.      2.        4.        1    1    2
100.      2.        4.        1    2    3
100.      2.        4.        1    3    4
100.      2.        4.        1    4    5
100.      2.        4.        1    5    6
```

NOT REPRODUCIBLE

Program Output

SIMPLY SUPPORTED BEAM WITH 6 JOINTS
AUGUST 1968

NJTS = 6 NR = 2 NBE = 5 NPE = 0 NMODE = 4 MKEY = 2 NLUMP = 0

MATERIAL PROPERTIES

NO.	YOUNGS MODULUS	POISSON RATIO	MODULUS OF RIGIDITY	DENSITY
1	0.10000E 07	0.33000	0.37594E 06	0.12000E-01

JOINT COORDINATES

JOINT NO.	X COORD.	Y COORD.
1	0.	0.
2	0.	10.00000
3	0.	20.00000
4	0.	30.00000
5	0.	40.00000
6	0.	50.00000

JOINT RESTRAINT CODE

JOINT NO.	Z DISPLACEMENT	ROTATION ABOUT X	ROTATION ABOUT Y
1	1	0	1
6	1	0	1

COORINATE NUMBERS FOR EACH Z DISPLACEMENT AT EACH UNRESTRAINED JOINT

JOINT NO.	COORD. NO.
2	1
3	2
4	3
5	4

BEAM ELEMENT PROPERTIES

ELEMENT NO.	A	I	J	MAT	JOINT 1	JOINT 2
1	100.0000	2.0000	4.0000	1	1	2
2	100.0000	2.0000	4.0000	1	2	3
3	100.0000	2.0000	4.0000	1	3	4
4	100.0000	2.0000	4.0000	1	4	5
5	100.0000	2.0000	4.0000	1	5	6

REDUCED UPPER TRIANGULAR STIFFNESS MATRIX

ROW 1
0.19731E 05 -0.19005E 05 0.82679E 04 -0.20670E 04

ROW 2
0.28019E 05 -0.21072E 05 0.82679E 04

ROW 3
0.28019E 05 -0.19005E 05

ROW 4
0.19751E 05

REDUCED UPPER TRIANGULAR FLEXIBILITY MATRIX

ROW 1
0.53333E-03 0.75000E-03 0.66667E-03 0.38333E-03

ROW 2
0.12000E-02 0.11333E-02 0.66667E-03

ROW 3
0.12000E-02 0.75000E-03

ROW 4
0.53333E-03

REDUCED UPPER TRIANGULAR WEIGHT MATRIX

ROW 1
0.11172E 02 0.93900E 00 -0.56295E 00 0.21468E 00

ROW 2
0.10609E 02 0.11537E 01 -0.56295E 00

ROW 3
0.10609E 02 0.93900E 00

ROW 4
0.11172E 02

HERE ARE THE EIGENVALUES AND EIGENVECTORS

EIGENVECTOR NUMBER 1
CORRESPONDING TO 1.0030593E 04
6.1803364E-01 9.9999962E-01 1.0000000E 00 6.1803418E-01

EIGENVECTOR NUMBER 2
CORRESPONDING TO 1.6120593E 05
1.0000000E 00 6.1803418E-01 -6.1803363E-01 -9.9999968E-01

EIGENVECTOR NUMBER 3
CORRESPONDING TO 8.4178930E 05
1.0000000E 00 -6.1803399E-01 -6.1803401E-01 1.0000000E 00

EIGENVECTOR NUMBER 4
CORRESPONDING TO 2.9858634E 06
-6.1803397E-01 1.0000000E 00 -9.9999993E-01 6.1803399E-01

HERE ARE THE NATURAL FREQUENCIES

THE NATURAL FREQUENCY NUMBER 1 IS 19,948 CPS
THE NATURAL FREQUENCY NUMBER 2 IS 63,901 CPS
THE NATURAL FREQUENCY NUMBER 3 IS 144,883 CPS
THE NATURAL FREQUENCY NUMBER 4 IS 275,614 CPS

SAMPLE PROBLEM NO. 1a

Simply Supported Beam

Identical to Sample Problem 1 with the addition of lumped mass input at joint 3 and 4.

Program Output

SIMPLY SUPPORTED BEAM WITH 6 JOINTS - USING BOTH CONSISTENT MASS MATRIX OPTION AND LUMPED MASS INPUT AT JOINTS 3 AND 4.

NJTS = 6 NR = 2 NBE = 5 NPE = 0 NMODE = 4 MKEY = 2 NLUMP = 2

MATERIAL PROPERTIES

NO.	YOUNG'S MODULUS	POISSON RATIO	MODULUS OF RIGIDITY	DENSITY
1	0.10000E 07	0.33000	0.37594E 06	0.12000E-01

JOINT COORDINATES

JOINT NO.	X COORD.	Y COORD.
1	0.	0.
2	0.	10.00000
3	0.	20.00000
4	0.	30.00000
5	0.	40.00000
6	0.	50.00000

JOINT RESTRAINT CODE

JOINT NO.	Z DISPLACEMENT	ROTATION ABOUT X	ROTATION ABOUT Y
1	1	0	1
6	1	0	1

COORINATE NUMBERS FOR EACH Z DISPLACEMENT AT EACH UNRESTRAINED JOINT

JOINT NO.	COORD. NO.
2	1
3	2
4	3
5	4

LUMPED WEIGHTS

JOINT NO.	WEIGHT
3	20.0000
4	30.0000

BEAM ELEMENT PROPERTIES

ELEMENT NO.	A	I	J	MAT	JOINT 1	JOINT 2
1	100.0000	2.0000	4.0000	1	1	2
2	100.0000	2.0000	4.0000	1	2	3
3	80.0000	2.0000	4.0000	1	3	4
4	100.0000	2.0000	4.0000	1	4	5
5	80.0000	2.0000	4.0000	1	5	6

REDUCED UPPER TRIANGULAR STIFFNESS MATRIX

ROW 1
0.19751E 05 -0.19005E 05 0.82679E 04 -0.20670E 04

ROW 2
0.28019E 05 -0.21072E 05 0.82679E 04

ROW 3
0.28019E 05 -0.19005E 05

ROW 4
0.19751E 05

REDUCED UPPER TRIANGULAR FLEXIBILITY MATRIX

ROW 1
0.53333E-03 0.75000E-03 0.66667E-03 0.38333E-03

ROW 2
0.12000E-02 0.11333E-02 0.66667E-03

ROW 3
0.12000E-02 0.75000E-03

ROW 4
0.53333E-03

REDUCED UPPER TRIANGULAR WEIGHT MATRIX

ROW 1
0.11172E 02 0.93900E 00 -0.56295E 00 0.21468E 00

ROW 2
0.30609E 02 0.11537E 01 -0.56295E 00

ROW 3
0.40609E 02 0.93900E 00

ROW 4
0.11172E 02

HERE ARE THE EIGENVALUES AND EIGENVECTORS

EIGENVECTOR NUMBER 1
CORRESPONDING TO 4.9904330E 03
6.0476160E-01 9.9286114E-01 1.0000000E 00 6.1371664E-01

EIGENVECTOR NUMBER 2
CORRESPONDING TO 1.0007129E 05
1.0000000E 00 7.2539523E-01 -5.6665892E-01 -8.8326765E-01

EIGENVECTOR NUMBER 3
CORRESPONDING TO 6.7652136E 05
8.9313311E-01 -1.9308592E-01 -1.8372997E-01 1.0000000E 00

EIGENVECTOR NUMBER 4
CORRESPONDING TO 1.3253830E 06
1.0000000E 00 -5.3894772E-01 3.9625669E-01 -9.1981987E-01

HERE ARE THE NATURAL FREQUENCIES

THE NATURAL FREQUENCY NUMBER 1 IS 10.054 CPS
THE NATURAL FREQUENCY NUMBER 2 IS 50.347 CPS
THE NATURAL FREQUENCY NUMBER 3 IS 130.906 CPS
THE NATURAL FREQUENCY NUMBER 4 IS 183.228 CPS

Sample Problem No. 2

Cantilever Plate

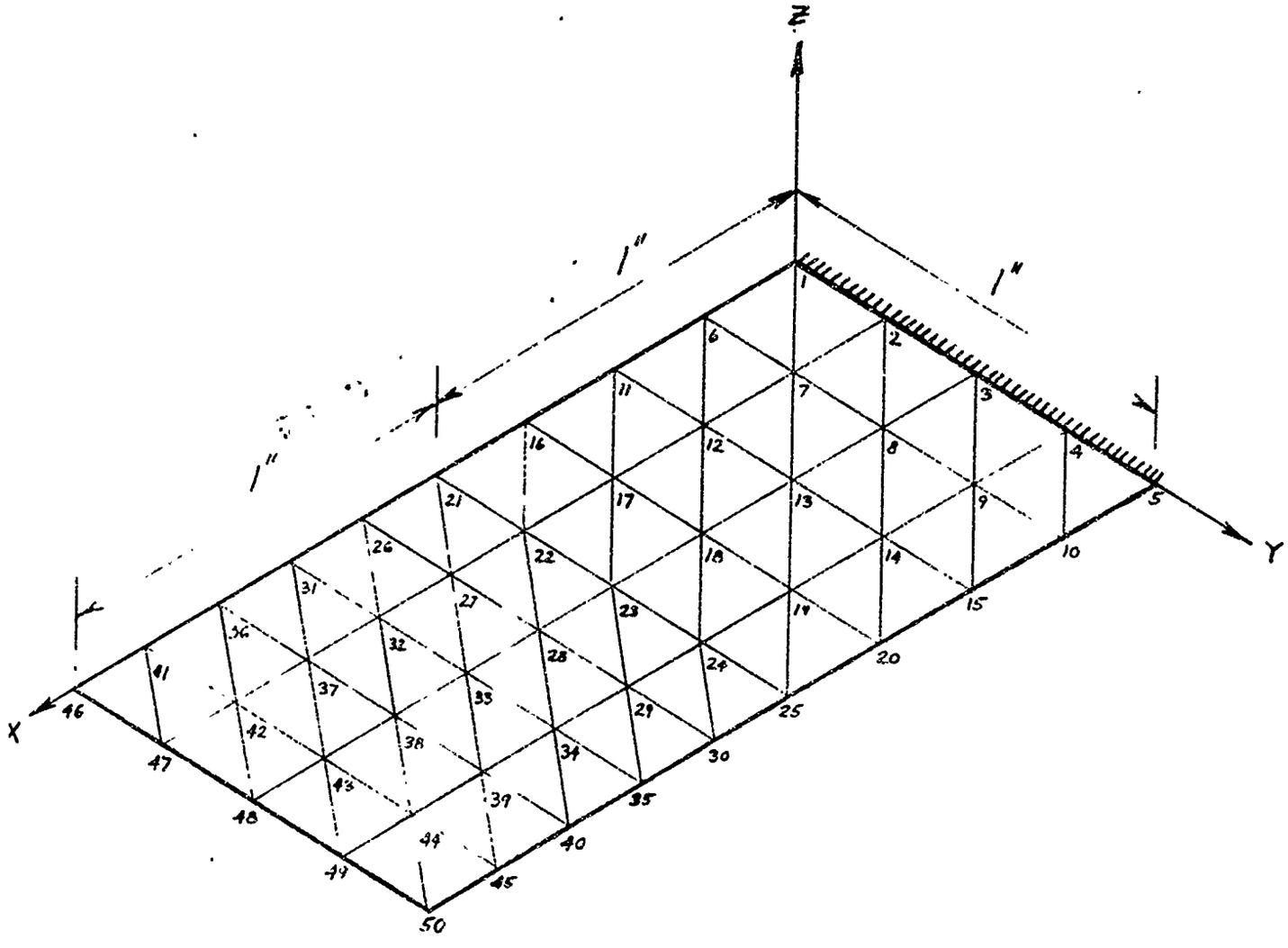

$E = 3 \times 10^7$ psi

$\nu = 0.3$

$\rho = 0.283$ lb/in^3

$t = 0.1$ in.

Listing of Input Data Cards

```
CANTILEVER PLATE WITH 50 JOINTS
AUGUST 1968
   50     5     0    72     9     2     0
    1
30.        0.3        0.              0.283
    1      0.         0.
    2      0.         .25
    3      0.         .5
    4      0.         .75
    5      0.         1.
    6      .25        0.
    7      .25        .25
    8      .25        .5
    9      .25        .75
   10      .25        1.
   11      .5         .0
   12      .5         .25
   13      .5         .5
   14      .5         .75
   15      .5         1.
   16      .75        .0
   17      .75        .25
   18      .75        .5
   19      .75        .75
   20      .75        1.
   21      1.         0.
   22      1.         .25
   23      1.         .5
   24      1.         .75
   25      1.         1.
   26      1.2        0.
   27      1.2        .25
   28      1.2        .5
   29      1.2        .75
   30      1.2        1.
   31      1.4        .0
   32      1.4        .25
   33      1.4        .5
   34      1.4        .75
   35      1.4        1.
   36      1.6        0.
   37      1.6        .25
   38      1.6        .5
   39      1.6        .75
   40      1.6        1.
   41      1.8        0.
   42      1.8        .25
   43      1.8        .5
   44      1.8        .75
   45      1.8        1.
   46      2.0        0.
   47      2.0        .25
   48      2.0        .5
```

NOT REPRODUCIBLE

49	2.0		.75		
50	2.0		1.		
1	1	1	1		
2	1	1	1		
3	1	1	1		
4	1	1	1		
5	1	1	1		
0.1		1	1	7	6
0.1		1	1	2	7
0.1		1	2	8	7
0.1		1	2	3	8
0.1		1	3	9	8
0.1		1	3	4	9
0.1		1	4	10	9
0.1		1	4	5	10
0.1		1	6	12	11
0.1		1	6	7	12
0.1		1	7	13	12
0.1		1	7	8	13
0.1		1	8	14	13
0.1		1	8	9	14
0.1		1	9	15	14
0.1		1	9	10	15
0.1		1	11	17	16
0.1		1	11	12	17
0.1		1	12	18	17
0.1		1	12	13	18
0.1		1	13	19	18
0.1		1	13	14	19
0.1		1	14	20	19
0.1		1	14	15	20
0.1		1	16	22	21
0.1		1	16	17	22
0.1		1	17	23	22
0.1		1	17	18	23
0.1		1	18	24	23
0.1		1	18	19	24
0.1		1	19	25	24
0.1		1	19	20	25
0.1		1	21	27	26
0.1		1	21	22	27
0.1		1	22	28	27
0.1		1	22	23	28
0.1		1	23	29	28
0.1		1	23	24	29
0.1		1	24	30	29
0.1		1	24	25	30
0.1		1	26	32	31
0.1		1	26	27	32
0.1		1	27	33	32
0.1		1	27	28	33
0.1		1	28	34	33

NOT REPRODUCIBLE

0.1	1	28	29	34
0.1	1	29	35	34
0.1	1	29	30	35
0.1	1	31	37	36
0.1	1	31	32	7
0.1	1	32	38	37
0.1	1	32	33	38
0.1	1	33	39	38
0.1	1	33	34	39
0.1	1	34	40	39
0.1	1	34	35	40
0.1	1	36	42	41
0.1	1	36	37	42
0.1	1	37	43	42
0.1	1	37	38	43
0.1	1	38	44	43
0.1	1	38	39	44
0.1	1	39	45	44
0.1	1	39	40	45
0.1	1	41	47	46
0.1	1	41	42	47
0.1	1	42	48	47
0.1	1	42	43	48
0.1	1	43	49	48
0.1	1	43	44	49
0.1	1	44	50	49
0.1	1	44	45	50

Program Output

CANTILEVER PLATE WITH 50 JOINTS
AUGUST 1968

NJTS = 50 NM = 5 NBE = 0 NPL = 72 NMODF = 9 MKEY = 2 NLUMP = 0

MATERIAL PROPERTIES

NO.	YOUNG'S MODULUS	POISSON RATIO	MODULUS OF RIGIDITY	DENSITY
1	0.10000E 08	0.40000	0.11538E 08	0.28348E 00

JOINT COORDINATES

JOINT NO.	X COORD.	Y COORD.
1	0.	0.
2	0.	0.25000
3	0.	0.50000
4	0.	0.75000
5	0.	1.00000
6	0.25000	0.
7	0.25000	0.25000
8	0.25000	0.50000
9	0.25000	0.75000
10	0.25000	1.00000
11	0.50000	0.
12	0.50000	0.25000
13	0.50000	0.50000
14	0.50000	0.75000
15	0.50000	1.00000
16	0.75000	0.
17	0.75000	0.25000
18	0.75000	0.50000
19	0.75000	0.75000
20	0.75000	1.00000
21	1.00000	0.
22	1.00000	0.25000
23	1.00000	0.50000
24	1.00000	0.75000
25	1.00000	1.00000
26	1.25000	0.
27	1.25000	0.25000
28	1.25000	0.50000
29	1.25000	0.75000
30	1.25000	1.00000
31	1.50000	0.
32	1.50000	0.25000
33	1.50000	0.50000
34	1.50000	0.75000
35	1.50000	1.00000
36	1.75000	0.
37	1.75000	0.25000
38	1.75000	0.50000
39	1.75000	0.75000
40	1.75000	1.00000
41	1.75000	0.
42	1.75000	0.25000
43	1.75000	0.50000
44	1.75000	0.75000
45	1.75000	1.00000

NOT REPRODUCIBLE

46	2.00000	0.
47	2.00000	0.250000
48	2.00000	0.500000
49	2.00000	0.750000
50	2.00000	1.000000

JOINT RESTRAINT CODE **********			
JOINT NO.	Z DISPLACEMENT	ROTATION ABOUT X	ROTATION ABOUT Y
1	1	1	1
2	1	1	1
3	1	1	1
4	1	1	1
5	1	1	1

COORINATE NUMBERS FOR EACH Z DISPLACEMENT AT EACH UNRESTRAINED JOINT

JOINT NO.	COORD. NO.
6	1
7	2
8	3
9	4
10	5
11	6
12	7
13	8
14	9
15	10
16	11
17	12
18	13
19	14
20	15
21	16
22	17
23	18
24	19
25	20
26	21
27	22
28	23
29	24
30	25
31	26
32	27
33	28
34	29
35	30
36	31
37	32
38	33
39	34
40	35
41	36
42	37
43	38
44	39
45	40
46	41
47	42
48	43
49	44
50	45

TRIANGULAR PLATE ELEMENT PROPERTIES										
ELEMENT NO.	T	MAT	JOINT 1	JOINT 2	JOINT 3	DX	DY	DI	DXY	BETA
1	0.1000	1	1	7	6	0.27473E 04	0.27473E 04	0.82418E 03	0.96154E 03	0.
2	0.1000	1	1	2	7	0.27473E 04	0.27473E 04	0.82418E 03	0.96154E 03	0.
3	0.1000	1	2	8	7	0.27473E 04	0.27473E 04	0.82418E 03	0.96154E 03	0.
4	0.1000	1	2	3	8	0.27473E 04	0.27473E 04	0.82418E 03	0.96154E 03	0.
5	0.1000	1	3	9	8	0.27473E 04	0.27473E 04	0.82418E 03	0.96154E 03	0.
6	0.1000	1	3	4	9	0.27473E 04	0.27473E 04	0.82418E 03	0.96154E 03	0.
7	0.1000	1	4	10	9	0.27473E 04	0.27473E 04	0.82418E 03	0.96154E 03	0.
8	0.1000	1	4	5	10	0.27473E 04	0.27473E 04	0.82418E 03	0.96154E 03	0.
9	0.1000	1	6	12	11	0.27473E 04	0.27473E 04	0.82418E 03	0.96154E 03	0.
10	0.1000	1	6	7	12	0.27473E 04	0.27473E 04	0.82418E 03	0.96154E 03	0.
11	0.1000	1	7	13	12	0.27473E 04	0.27473E 04	0.82418E 03	0.96154E 03	0.
12	0.1000	1	7	8	13	0.27473E 04	0.27473E 04	0.82418E 03	0.96154E 03	0.
13	0.1000	1	8	14	13	0.27473E 04	0.27473E 04	0.82418E 03	0.96154E 03	0.
14	0.1000	1	8	9	14	0.27473E 04	0.27473E 04	0.82418E 03	0.96154E 03	0.
15	0.1000	1	9	15	14	0.27473E 04	0.27473E 04	0.82418E 03	0.96154E 03	0.
16	0.1000	1	9	10	15	0.27473E 04	0.27473E 04	0.82418E 03	0.96154E 03	0.
17	0.1000	1	11	17	16	0.27473E 04	0.27473E 04	0.82418E 03	0.96154E 03	0.
18	0.1000	1	11	12	17	0.27473E 04	0.27473E 04	0.82418E 03	0.96154E 03	0.
19	0.1000	1	12	18	17	0.27473E 04	0.27473E 04	0.82418E 03	0.96154E 03	0.
20	0.1000	1	12	13	18	0.27473E 04	0.27473E 04	0.82418E 03	0.96154E 03	0.
21	0.1000	1	13	19	18	0.27473E 04	0.27473E 04	0.82418E 03	0.96154E 03	0.
22	0.1000	1	13	14	19	0.27473E 04	0.27473E 04	0.82418E 03	0.96154E 03	0.
23	0.1000	1	14	20	19	0.27473E 04	0.27473E 04	0.82418E 03	0.96154E 03	0.
24	0.1000	1	14	15	20	0.27473E 04	0.27473E 04	0.82418E 03	0.96154E 03	0.
25	0.1000	1	16	22	21	0.27473E 04	0.27473E 04	0.82418E 03	0.96154E 03	0.
26	0.1000	1	16	17	22	0.27473E 04	0.27473E 04	0.82418E 03	0.96154E 03	0.
27	0.1000	1	17	23	22	0.27473E 04	0.27473E 04	0.82418E 03	0.96154E 03	0.
28	0.1000	1	17	18	23	0.27473E 04	0.27473E 04	0.82418E 03	0.96154E 03	0.
29	0.1000	1	18	24	23	0.27473E 04	0.27473E 04	0.82418E 03	0.96154E 03	0.
30	0.1000	1	18	19	24	0.27473E 04	0.27473E 04	0.82418E 03	0.96154E 03	0.
31	0.1000	1	19	25	24	0.27473E 04	0.27473E 04	0.82418E 03	0.96154E 03	0.
32	0.1000	1	19	20	25	0.27473E 04	0.27473E 04	0.82418E 03	0.96154E 03	0.
33	0.1000	1	21	27	26	0.27473E 04	0.27473E 04	0.82418E 03	0.96154E 03	0.
34	0.1000	1	21	22	27	0.27473E 04	0.27473E 04	0.82418E 03	0.96154E 03	0.
35	0.1000	1	22	28	27	0.27473E 04	0.27473E 04	0.82418E 03	0.96154E 03	0.
36	0.1000	1	22	23	28	0.27473E 04	0.27473E 04	0.82418E 03	0.96154E 03	0.
37	0.1000	1	23	29	28	0.27473E 04	0.27473E 04	0.82418E 03	0.96154E 03	0.
38	0.1000	1	23	24	29	0.27473E 04	0.27473E 04	0.82418E 03	0.96154E 03	0.
39	0.1000	1	24	30	29	0.27473E 04	0.27473E 04	0.82418E 03	0.96154E 03	0.
40	0.1000	1	24	25	30	0.27473E 04	0.27473E 04	0.82418E 03	0.96154E 03	0.
41	0.1000	1	26	32	31	0.27473E 04	0.27473E 04	0.82418E 03	0.96154E 03	0.
42	0.1000	1	26	27	32	0.27473E 04	0.27473E 04	0.82418E 03	0.96154E 03	0.
43	0.1000	1	27	33	32	0.27473E 04	0.27473E 04	0.82418E 03	0.96154E 03	0.
44	0.1000	1	27	28	33	0.27473E 04	0.27473E 04	0.82418E 03	0.96154E 03	0.
45	0.1000	1	28	34	33	0.27473E 04	0.27473E 04	0.82418E 03	0.96154E 03	0.
46	0.1000	1	28	29	34	0.27473E 04	0.27473E 04	0.82418E 03	0.96154E 03	0.
47	0.1000	1	29	35	34	0.27473E 04	0.27473E 04	0.82418E 03	0.96154E 03	0.
48	0.1000	1	29	30	35	0.27473E 04	0.27473E 04	0.82418E 03	0.96154E 03	0.
49	0.1000	1	31	37	36	0.27473E 04	0.27473E 04	0.82418E 03	0.96154E 03	0.
50	0.1000	1	31	32	37	0.27473E 04	0.27473E 04	0.82418E 03	0.96154E 03	0.
51	0.1000	1	32	38	37	0.27473E 04	0.27473E 04	0.82418E 03	0.96154E 03	0.
52	0.1000	1	32	33	38	0.27473E 04	0.27473E 04	0.82418E 03	0.96154E 03	0.
53	0.1000	1	33	39	38	0.27473E 04	0.27473E 04	0.82418E 03	0.96154E 03	0.
54	0.1000	1	33	34	39	0.27473E 04	0.27473E 04	0.82418E 03	0.96154E 03	0.
55	0.1000	1	34	40	39	0.27473E 04	0.27473E 04	0.82418E 03	0.96154E 03	0.
56	0.1000	1	34	35	40	0.27473E 04	0.27473E 04	0.82418E 03	0.96154E 03	0.
57	0.1000	1	36	42	41	0.27473E 04	0.27473E 04	0.82418E 03	0.96154E 03	0.
58	0.1000	1	36	37	42	0.27473E 04	0.27473E 04	0.82418E 03	0.96154E 03	0.
59	0.1000	1	37	43	42	0.27473E 04	0.27473E 04	0.82418E 03	0.96154E 03	0.
60	0.1000	1	37	38	43	0.27473E 04	0.27473E 04	0.82418E 03	0.96154E 03	0.
61	0.1000	1	38	44	43	0.27473E 04	0.27473E 04	0.82418E 03	0.96154E 03	0.
[illegible]	0.10	1	38	[illegible]	44	0.27 04	274 04	2418 03	9615 03	0.

63	0.1000	1	39	45		0.27473E 04	0.27473E 04	0.82418E 03	0.96154E 03		
64	0.1000	1	39	40	45	0.27473E 04	0.27473E 04	0.82418E 03	0.96154E 03	0.	
65	0.1000	1	41	47	46	0.27473E 04	0.27473E 04	0.82418E 03	0.96154E 03	0.	
66	0.1000	1	41	42	47	0.27473E 04	0.27473E 04	0.82418E 03	0.96154E 03	0.	
67	0.1000	1	42	48	47	0.27473E 04	0.27473E 04	0.82418E 03	0.96154E 03	0.	
68	0.1000	1	42	43	48	0.27473E 04	0.27473E 04	0.82418E 03	0.96154E 03	0.	
69	0.1000	1	43	49	48	0.27473E 04	0.27473E 04	0.82418E 03	0.96154E 03	0.	
70	0.1000	1	43	44	49	0.27473E 04	0.27473E 04	0.82418E 03	0.96154E 03	0.	
71	0.1000	1	44	50	49	0.27473E 04	0.27473E 04	0.82418E 03	0.96154E 03	0.	
72	0.1000	1	44	45	50	0.27473E 04	0.27473E 04	0.82418E 03	0.96154E 03	0.	

REDUCED UPPER TRIANGULAR STIFFNESS MATRIX

ROW 1

0.38184E 06	-0.18492E 06	0.95848E 05	-0.34859E 05	0.58053E 04	-0.18982E 06	-0.62329E 05	0.38326E 05	-0.17619E 05
0.41632E 04	0.56024E 05	0.63380E 05	-0.22117E 04	0.31334E 04	-0.19190E 03	-0.15114E 05	-0.24939E 05	-0.48357E 04
-0.13656E 03	-0.23826E 03	0.48208E 04	0.95578E 04	0.24870E 04	0.15193E 03	0.61424E 02	-0.14326E 04	-0.28584E 04
-0.18935E 04	-0.96810E 02	-0.22885E 02	0.43144E 03	0.85105E 03	0.42876E 03	0.56185E 02	0.94939E 01	-0.11348E 03
-0.23900E 03	-0.13544E 03	-0.24879E 02	-0.37753E 01	0.18083E 02	0.44329E 02	0.26342E 02	0.55807E 01	-0.12755E 01

ROW 2

0.13735E 07	-0.51840E 06	0.19688E 06	-0.38797E 05	0.29996E 05	-0.48473E 06	-0.69875E 05	0.41854E 05	-0.15124E 05
0.55155E 03	0.14360E 06	0.51281E 05	0.23458E 03	0.12713E 04	-0.94953E 03	-0.34281E 05	-0.21328E 05	-0.34018E 04
-0.65325E 02	0.60250E 03	0.96638E 04	0.84179E 04	0.19618E 04	0.18710E 03	-0.21515E 03	-0.23586E 04	-0.25243E 04
-0.82498E 03	-0.17917E 03	0.71923E 02	0.59994E 03	0.72275E 03	0.32164E 03	0.68783E 02	-0.19415E 02	-0.14382E 03
-0.18975E 03	-0.18121E 03	-0.28176E 02	0.28248E 01	0.23167E 02	0.33249E 02	0.18464E 02	0.71597E 01	

ROW 3

0.15662E 07	-0.50503E 06	0.87228E 05	0.15932E 05	0.52338E 04	-0.44967E 06	-0.66763E 05	0.38249E 05	-0.36398E 04
0.12358E 05	0.13379E 06	0.58593E 05	0.34355E 04	0.57668E 03	-0.31149E 04	-0.32033E 05	-0.21294E 05	-0.43986E 04
-0.18881E 03	0.18659E 04	0.88848E 04	0.83574E 04	0.22327E 04	0.45619E 02	-0.27998E 03	-0.21284E 04	-0.24693E 04
-0.91698E 03	-0.12485E 02	0.71883E 02	0.52856E 03	0.69528E 03	0.35446E 03	0.34873E 01	-0.16248E 02	-0.12276E 03
-0.17640E 03	-0.11361E 03	-0.56691E 00	0.26993E 01	0.19916E 02	0.27754E 02	0.23576E 02		

ROW 4

0.13498E 07	-0.51588E 06	-0.63592E 04	0.26778E 05	0.41272E 04	-0.48338E 06	-0.52917E 05	0.99684E 03	-0.63327E 04
0.12391E 05	0.14396E 06	0.53943E 05	-0.12791E 03	0.57898E 03	-0.38873E 04	-0.34857E 05	-0.22987E 05	0.66883E 02
-0.22959E 03	0.12534E 04	0.95655E 04	0.89692E 04	-0.18302E 02	0.55559E 02	-0.39888E 03	-0.21078E 04	-0.26879E 04
0.51469E 01	-0.11783E 02	0.11421E 03	0.58541E 03	0.80920E 03	-0.15297E 01	0.38778E 01	-0.31868E 02	-0.18351E 03
-0.21869E 03	0.38585E 00	-0.18563E 01	0.59783E 01	0.12843E 02	0.40457E 02			

ROW 5

0.48833E 06	0.18169E 04	-0.88997E 04	0.23129E 05	0.12803E 05	-0.21731E 06	-0.53881E 03	0.21288E 04	-0.67875E 04
0.93579E 04	0.68639E 05	-0.88698E 01	0.29467E 02	0.18044E 03	-0.35499E 03	-0.15234E 05	0.24892E 02	-0.14538E 03
0.32516E 03	-0.57621E 03	0.47284E 04	-0.42186E 01	0.31127E 02	-0.92873E 02	0.20577E 03	-0.11884E 04	0.15427E 01
-0.85634E 01	0.26762E 02	-0.63543E 02	0.29887E 03	-0.44913E 00	0.24546E 01	-0.79428E 01	0.19735E 02	-0.71845E 02
0.18681E 00	-0.59884E 00	0.18758E 01	-0.46714E 01	0.12213E 02				

ROW 6

0.35117E 06	-0.19898E 06	0.99973E 05	-0.35879E 05	0.71676E 04	-0.18485E 06	-0.57658E 05	0.36518E 05	-0.17812E 05
0.38780E 04	0.68178E 05	0.66477E 05	-0.41255E 03	0.26388E 04	-0.45851E 02	-0.19697E 05	-0.30161E 05	-0.48937E 04
-0.13647E 03	-0.22978E 03	0.57398E 04	0.95677E 04	0.24432E 04	0.15446E 02	0.71878E 02	-0.17289E 04	-0.29625E 04
-0.11678E 04	-0.48403E 02	-0.14518E 02	0.45328E 03	0.85374E 03	0.39888E 03	0.35779E 02	0.48649E 01	-0.72577E 02
-0.16299E 03	-0.88436E 02	-0.18345E 02	-0.18876E 01					

ROW 7

0.11572E 07	-0.58778E 06	0.19554E 06	-0.36196E 05	0.31551E 05	-0.43975E 06	-0.58468E 05	0.40826E 05	-0.13465E 05
0.81272E 03	0.14187E 06	0.51996E 05	-0.89733E 03	0.82513E 03	-0.78962E 03	-0.40143E 05	-0.24513E 05	-0.35176E 04
0.23341E 03	0.48099E 03	0.93288E 04	0.82288E 04	0.16679E 04	0.12621E 03	-0.16313E 03	-0.23258E 04	-0.24361E 04
-0.79484E 03	-0.18666E 03	0.46276E 02	0.54600E 03	0.65337E 03	0.27673E 03	0.58824E 02	-0.61988E 01	-0.86181E 02
-0.11618E 03	-0.52521E 02	-0.15371E 02						

ROW 8

0.13683E 07	-0.51133E 06	0.18143E 06	-0.35176E 05	0.49851E 04	-0.48989E 06	-0.56175E 05	0.26921E 05	-0.33864E 04

0.13069E 05 0.13389E 06 0.51585E 05 0.41479E 04 0.62446E 03 -0.33046E 04 -0.38538E 05 -0.24677E 05 -0.45752E 04
-0.23088E 03 0.10993E 04 0.88577E 04 0.81091E 04 0.19621E 04 0.52598E 02 -0.27812E 03 -0.21881E 04 -0.24016E 04
-0.90307E 03 -0.15751E 02 0.61999E 02 0.50149E 03 0.63306E 03 0.31198E 03 -0.25867E 01 -0.67048E 01 -0.88471E 02
-0.10324E 03 -0.67642E 02

ROW 9
0.11651E 07 -0.19591E 06 -0.62174E 04 0.28216E 05 0.45631E 04 -0.44331E 06 -0.36827E 05 0.95424E 03 -0.68818E 04
0.13192E 05 0.14346E 06 0.53782E 05 -0.12568E 03 0.11058E 04 -0.32188E 04 -0.41348E 05 -0.25752E 05 0.71189E 02
-0.38878E 03 0.12832E 04 0.95147E 04 0.83715E 04 -0.12512E 02 0.74619E 02 -0.34256E 03 -0.22324E 04 -0.26098E 04
0.35484E 01 -0.21363E 02 0.96448E 02 0.47031E 03 0.73569E 03 -0.89119E 00 0.48561E 01 -0.17623E 02 -0.59721E 02
-0.13869E 03

ROW 10
0.36886E 06 0.18220E 04 -0.89781E 04 0.22910E 05 0.18003E 05 -0.19105E 06 -0.38717E 03 0.20156E 04 -0.65248E 04
0.73738E 04 0.58928E 05 -0.69881E 02 0.24285E 03 -0.17725E 03 0.93778E 03 -0.17984E 05 0.11649E 01 -0.39184E 02
0.10558E 03 -0.53968E 03 0.45183E 04 -0.33534E 01 0.18885E 02 -0.52582E 02 0.19777E 03 -0.11564E 04 0.96718E 00
-0.69746E 01 0.28589E 02 -0.68175E 02 0.28089E 03 -0.27491E 00 0.18385E 01 -0.53933E 01 0.16976E 02 -0.47756E 02

ROW 11
0.35248E 06 -0.18835E 06 0.18849E 06 -0.35925E 05 0.71471E 04 -0.28277E 06 -0.71813E 05 0.36681E 05 -0.16723E 05
0.37913E 04 0.78566E 05 0.88813E 05 -0.53393E 04 0.44591E 04 -0.52396E 03 -0.23873E 05 -0.28822E 05 -0.47497E 04
0.37492E 03 -0.26396E 03 0.69733E 04 0.94062E 04 0.27286E 04 -0.17648E 03 0.46339E 02 -0.18418E 04 -0.29126E 04
-0.18530E 04 -0.89578E 01 0.53530E 01 0.29586E 03 0.56742E 03 0.22286E 03 0.98868E 01 0.54648E 00

ROW 12
0.11533E 07 -0.58686E 06 0.19565E 06 -0.36275E 05 0.25794E 05 -0.47328E 06 -0.77388E 05 0.43939E 05 -0.14273E 05
0.25427E 04 0.17885E 06 0.66338E 05 -0.36886E 04 0.18327E 04 -0.35323E 03 -0.45737E 05 -0.21782E 05 -0.48676E 04
0.32838E 03 0.52112E 03 0.18583E 05 0.88438E 04 0.16522E 04 0.17855E 03 -0.12866E 03 -0.24583E 04 -0.22988E 04
-0.66012E 03 -0.18442E 03 0.14685E 02 0.39107E 03 0.41716E 03 0.13917E 03 0.29338E 02

ROW 13
0.13648E 07 -0.58988E 06 0.18133E 06 0.15953E 05 -0.47495E 03 -0.44303E 06 -0.74388E 05 0.29896E 05 -0.54694E 04
0.16421E 05 0.16888E 06 0.65948E 05 0.65676E 03 0.91188E 03 -0.14518E 04 -0.44383E 05 -0.22416E 05 -0.48458E 04
-0.43282E 03 0.96858E 03 0.98912E 04 0.80463E 04 0.17208E 04 0.98581E 02 -0.16725E 03 -0.22836E 04 -0.22642E 04
-0.74648E 03 -0.16894E 02 0.93629E 01 0.36483E 03 0.38469E 03 0.17895E 03

ROW 14
0.11623E 07 -0.19689E 06 -0.65344E 04 0.29482E 05 -0.63582E 03 -0.48885E 06 -0.48893E 05 0.17445E 04 -0.99168E 04
0.16953E 05 0.18182E 06 0.63876E 05 -0.21955E 03 0.79995E 03 -0.18751E 04 -0.45739E 05 -0.25238E 05 0.14488E 03
-0.44786E 03 0.11684E 04 0.10581E 05 0.88173E 04 -0.23892E 02 0.73612E 02 -0.27899E 03 -0.22799E 04 -0.25778E 04
0.57887E 01 -0.14869E 02 0.48896E 02 0.31016E 03 0.49844E 03

ROW 15
0.36446E 06 0.18134E 04 -0.87278E 04 0.22488E 05 0.20008E 05 -0.20934E 06 -0.39149E 03 0.21659E 04 -0.74018E 04
0.57594E 04 0.76567E 05 -0.26882E 02 0.33247E 03 -0.25252E 03 0.16419E 04 -0.19228E 05 -0.28826E 02 0.79496E 01
-0.85285E 01 -0.68557E 03 0.48738E 04 -0.24177E 00 0.27442E 02 -0.55573E 02 0.25152E 03 -0.11998E 04 0.16899E-01
-0.77578E 01 0.18294E 02 -0.67515E 02 0.20535E 03

ROW 16
0.44138E 06 -0.17758E 06 0.98868E 05 -0.33875E 05 0.67856E 04 -0.38504E 06 -0.75217E 05 0.36485E 05 -0.14779E 05
0.38886E 04 0.18736E 06 0.99306E 05 -0.10739E 05 0.68247E 04 -0.88783E 03 -0.32572E 05 -0.35578E 05 -0.53588E 04
0.45542E 03 -0.35745E 03 0.84581E 04 0.11531E 05 0.27472E 04 -0.27255E 03 0.77618E 02 -0.13681E 04 -0.23577E 04
-0.65077E 03 0.14396E 02 -0.38886E 01

ROW 17
0.13178E 07 -0.47859E 06 0.17585E 06 -0.32448E 05 0.45997E 05 -0.69852E 06 -0.61988E 05 0.34231E 05 -0.18529E 05
-0.35387E 04 0.27734E 06 0.83832E 05 -0.92299E 04 0.24819E 04 0.16215E 04 -0.57707E 05 -0.27372E 05 -0.41777E 04
0.75374E 03 -0.78641E 02 0.12381E 05 0.94540E 04 0.15463E 04 0.36639E 02 0.78415E 02 -0.19819E 04 -0.17693E 04
-0.36195E 03 -0.66857E 02

ROW 18
0.15178E 07 -0.47894E 06 0.91262E 05 0.17044E 05 0.97879E 04 -0.66886E 06 -0.59298E 05 0.24575E 05 -0.41931E 04
0.17329E 05 0.21683E 06 0.82553E 05 0.42250E 03 0.49399E 03 -0.12517E 04 -0.56935E 05 -0.28268E 05 -0.55362E 04
-0.36018E 03 0.18118E 04 0.11957E 05 0.94316E 04 0.19613E 04 0.35537E 02 -0.66616E 02 -0.19422E 04 -0.16655E 04
-0.55416E 03

```
 0.13445E 07  -0.19765E 06  -0.85270E 04   0.40296E 05   0.74303E 04  -0.70580E 06  -0.38395E 05   0.91622E 03  -0.92948E 04
 0.16866E 05   0.23205E 06   0.71001E 05  -0.58948E 02   0.48071E 03  -0.14596E 04  -0.58341E 05  -0.29558E 05   0.11454E 03
-0.51798E 03   0.11030E 04   0.12514E 05   0.99009E 04  -0.63015E 01   0.63937E 02  -0.12485E 03  -0.18084E 04  -0.19615E 04

ROW 20
 0.46118E 06   0.25798E 04  -0.12779E 05   0.29383E 05   0.31808E 05  -0.31273E 06  -0.15648E 03   0.15244E 04  -0.78803E 04
 0.63435E 04   0.10286E 06  -0.25765E 02   0.43659E 03  -0.49370E 03   0.28800E 04  -0.25835E 05  -0.19989E 02  -0.28931E 02
 0.96359E 02  -0.89167E 03   0.62808E 04  -0.41070E 01   0.33644E 02  -0.81453E 02   0.29577E 03  -0.10961E 04

ROW 21
 0.55052E 06  -0.18136E 06   0.87610E 05  -0.33548E 05   0.67968E 04  -0.33408E 06  -0.10124E 06   0.46488E 05  -0.19069E 05
 0.37236E 04   0.11561E 06   0.18786E 06  -0.10324E 05   0.67201E 04  -0.66918E 03  -0.31322E 05  -0.36182E 05  -0.44189E 04
 0.49174E 03  -0.41527E 03   0.49790E 04   0.75563E 04   0.11695E 04  -0.13827E 03   0.78427E 02

ROW 22
 0.15456E 07  -0.46403E 06   0.16862E 06  -0.31335E 05   0.53124E 05  -0.75364E 06  -0.98647E 05   0.44776E 05  -0.11892E 05
-0.74344E 04   0.24235E 06   0.68704E 05  -0.82298E 04   0.14320E 04   0.29514E 04  -0.57779E 05  -0.27238E 05  -0.37216E 04
 0.95383E 03  -0.46776E 03   0.86379E 04   0.60376E 04   0.62064E 03   0.14584E 02

ROW 23
 0.17318E 07  -0.46621E 06   0.83757E 05   0.14752E 05   0.17646E 04  -0.71783E 06  -0.87107E 05   0.26743E 05  -0.18331E 04
 0.14993E 05   0.23413E 06   0.87982E 05   0.30311E 04   0.13896E 03  -0.59745E 03  -0.57525E 05  -0.27873E 05  -0.54928E 04
-0.13429E 03   0.21974E 03   0.85995E 04   0.56967E 04   0.11831E 04

ROW 24
 0.15559E 07  -0.19213E 06  -0.82638E 04   0.44777E 05   0.38968E 03  -0.76147E 06  -0.49934E 05  -0.10237E 03  -0.74577E 04
 0.13882E 05   0.24722E 06   0.75124E 05   0.66871E 02   0.53729E 03  -0.55328E 03  -0.58132E 05  -0.29281E 05   0.36518E 02
-0.32389E 03   0.32699E 03   0.84278E 04   0.65151E 04

ROW 25
 0.56681E 06   0.26711E 04  -0.14299E 05   0.31548E 05   0.26674E 05  -0.34249E 06   0.68782E 02   0.10129E 04  -0.68798E 04
 0.58565E 04   0.11854E 06  -0.59953E 02   0.50681E 03  -0.74769E 03   0.26897E 04  -0.26529E 05   0.14421E 01  -0.59528E 02
 0.16884E 03  -0.95214E 03   0.45461E 04

ROW 26
 0.55249E 06  -0.18896E 06   0.88543E 05  -0.34144E 05   0.68787E 04  -0.33961E 06  -0.18887E 06   0.47192E 05  -0.19841E 05
 0.39185E 04   0.10284E 06   0.10188E 06  -0.13835E 05   0.73288E 04  -0.85158E 03  -0.17217E 05  -0.22175E 05  -0.68528E 03
-0.28782E 03  -0.23686E 03

ROW 27
 0.15767E 07  -0.47698E 06   0.17578E 06  -0.32482E 05   0.53475E 05  -0.75735E 06  -0.88415E 05   0.44361E 05  -0.12287E 05
-0.94317E 04   0.23174E 06   0.80378E 05  -0.97039E 04   0.17336E 04   0.38953E 04  -0.38571E 05  -0.14517E 05  -0.17374E 04
 0.68999E 03

ROW 28
 0.17711E 07  -0.48881E 06   0.85957E 05   0.15794E 05   0.48353E 04  -0.72112E 06  -0.84571E 05   0.27987E 05  -0.23311E 04
 0.11188E 05   0.22388E 06   0.78688E 05   0.14667E 04   0.21385E 02   0.28496E 04  -0.39855E 05  -0.14875E 05  -0.36783E 04

ROW 29
 0.15893E 07  -0.19341E 06  -0.86617E 04   0.45171E 05   0.28472E 04  -0.76362E 06  -0.50982E 05   0.65718E 01  -0.74834E 04
 0.97924E 04   0.23419E 06   0.67087E 05   0.56891E 02  -0.97135E 02   0.28138E 04  -0.37912E 05  -0.16778E 05

ROW 30
 0.57319E 06   0.27924E 04  -0.14474E 05   0.31799E 05   0.27827E 05  -0.34247E 06   0.72563E 02   0.83454E 03  -0.56219E 04
 0.35144E 04   0.10582E 06  -0.57286E 02   0.49871E 03  -0.81875E 03   0.29834E 04  -0.17921E 05

ROW 31
 0.53872E 06  -0.18587E 06   0.86877E 05  -0.33949E 05   0.68244E 04  -0.28871E 06  -0.79865E 05   0.55272E 05  -0.21252E 05
 0.45652E 04   0.56735E 05   0.57835E 05  -0.18225E 05   0.84186E 04  -0.15710E 04

ROW 32
 0.15658E 07  -0.48253E 06   0.17481E 06  -0.32177E 05   0.63946E 05  -0.71889E 06  -0.61348E 05   0.46766E 05  -0.13393E 05
-0.11498E 05   0.15638E 06   0.37895E 05  -0.82595E 04   0.22909E 04

ROW 33
```

0.17585E 07 -0.48728E 06 0.65008E 05 0.15448E 05 0.21303E 05 -0.67639E 06 -0.54348E 05 0.31258E 05 -0.84058E 03
0.61312E 03 0.15721E 06 0.33543E 05 -0.13831E 04

ROW 34
0.15746E 07 -0.19745E 06 -0.81659E 04 0.43493E 05 0.19506E 05 -0.71817E 06 -0.28926E 05 -0.14952E 03 -0.59496E 04
0.17563E 04 0.15235E 06 0.34188E 05

ROW 35
0.56827E 06 0.24849E 04 -0.13506E 05 0.29938E 05 0.38178E 05 -0.32243E 06 0.52442E 02 0.14828E 04 -0.54193E 04
0.13498E 03 0.71844E 05

ROW 36
0.39709E 06 -0.21258E 06 0.77381E 05 -0.29837E 05 0.59883E 04 -0.12768E 06 0.44879E 04 0.48167E 05 -0.23387E 05
0.59849E 04

ROW 37
0.13551E 07 -0.54129E 06 0.17814E 06 -0.33274E 05 0.65615E 05 -0.3927/E 06 0.38498E 05 0.38182E 05 -0.11616E 05

ROW 38
0.15706E 07 -0.55175E 06 0.98535E 05 0.54714E 04 0.92647E 05 -0.40788E 06 0.55173E 05 0.16593E 05

ROW 39
0.13663E 07 -0.24518E 06 -0.33837E 04 0.57444E 04 0.95985E 05 -0.48488E 06 0.44781E 05

ROW 40
0.48428E 06 0.94742E 03 -0.38154E 04 0.28956E 04 0.83852E 05 -0.18737E 06

ROW 41
0.18859E 06 -0.11884E 06 0.58978E 05 -0.21053E 05 0.49778E 04

ROW 42
0.48597E 06 -0.34789E 06 0.14088E 06 -0.32388E 05

ROW 43
0.68976E 06 -0.38273E 06 0.85332E 05

ROW 44
0.55299E 06 -0.17597E 06

ROW 45
0.17383E 06

REDUCED UPPER TRIANGULAR FLEXIBILITY MATRIX

ROW 1
0.92986E-05 0.37856E-05 0.16145E-05 0.73691E-06 0.55368E-07 0.15767E-04 0.18815E-04 0.58149E-05 0.32322E-05
0.12937E-05 0.28012E-04 0.14958E-04 0.10445E-04 0.68436E-05 0.38731E-05 0.23989E-04 0.19381E-04 0.14844E-04
0.19837E-04 0.72237E-05 0.27163E-04 0.42633E-04 0.18238E-04 0.14183E-04 0.10283E-04 0.38352E-04 0.25917E-04
0.21567E-04 0.17374E-04 0.13314E-04 0.33561E-04 0.29181E-04 0.24868E-04 0.20637E-04 0.16493E-04 0.36788E-04
0.32436E-04 0.28138E-04 0.23892E-04 0.19786E-04 0.48024E-04 0.35686E-04 0.31385E-04 0.27140E-04 0.22937E-04

ROW 2
0.33772E-05 0.78889E-05 0.13218E-05 0.53092E-06 0.85699E-05 0.74597E-05 0.58253E-05 0.41237E-05 0.27659E-05
0.12884E-04 0.11264E-04 0.95479E-05 0.77473E-05 0.60538E-05 0.16738E-04 0.15045E-04 0.13298E-04 0.11489E-04
0.97848E-05 0.19899E-04 0.18078E-04 0.16381E-04 0.14506E-04 0.12708E-04 0.22859E-04 0.21099E-04 0.19323E-04
0.17532E-04 0.15735E-04 0.25982E-04 0.24132E-04 0.22353E-04 0.20564E-04 0.18769E-04 0.28941E-04 0.2716/E-04
0.25386E-04 0.23598E-04 0.21886E-04 0.31979E-04 0.30203E-04 0.28421E-04 0.26634E-04 0.24843E-04

ROW 3
0.27446E-05 0.19472E-05 0.18671E-05 0.49052E-05 0.54866E-05 0.58463E-05 0.53489E-05 0.43832E-05 0.65783E-05
0.88974E-05 0.89978E-05 0.87131E-05 0.81117E-05 0.12222E-04 0.12328E-04 0.12324E-04 0.12125E-04 0.11768E-04
0.15889E-04 0.15184E-04 0.15053E-04 0.14887E-04 0.14627E-04 0.17931E-04 0.17895E-04 0.17817E-04 0.17670E-04
0.17468E-04 0.20759E-04 0.20694E-04 0.20601E-04 0.20465E-04 0.28295E-04 0.23577E-04 0.23[illegible]E-04 0.23[illegible]E-04
0.2[illegible]E-04 0.23[illegible]E-04 0.263[illegible]E-04 0.630[illegible]E-1 0.201[illegible] 0[illegible]73E[illegible] 0.[illegible]7E-[illegible]

ROW

0.29675E-05	0.23205E-05	0.27156E-05	0.36817E-05	0.49978E-05	0.62435E-05	0.67818E-05	0.53947E-05	0.66346E-05
0.79819E-05	0.92600E-05	0.10319E-04	0.83391E-05	0.96487E-05	0.10977E-04	0.12276E-04	0.13501E-04	0.10755E-04
0.12072E-04	0.13392E-04	0.14695E-04	0.15967E-04	0.13185E-04	0.14501E-04	0.15817E-04	0.17121E-04	0.18412E-04
0.15620E-04	0.16934E-04	0.18246E-04	0.19552E-04	0.20850E-04	0.18055E-04	0.19367E-04	0.20678E-04	0.21984E-04
0.23286E-04	0.20490E-04	0.21801E-04	0.23111E-04	0.24418E-04	0.25721E-04			

ROW 5

0.54226E-05	0.78348E-06	0.19845E-05	0.34579E-05	0.58969E-05	0.95107E-05	0.21902E-05	0.39879E-05	0.60853E-05
0.87833E-05	0.11949E-04	0.40239E-05	0.62108E-05	0.85882E-05	0.11269E-04	0.14176E-04	0.56731E-05	0.80282E-05
0.10504E-04	0.13156E-04	0.15938E-04	0.74038E-05	0.98497E-05	0.12373E-04	0.15003E-04	0.17118E-04	0.91723E-05
0.11669E-04	0.14216E-04	0.16831E-04	0.19495E-04	0.10963E-04	0.13485E-04	0.16043E-04	0.18658E-04	0.21291E-04
0.12764E-04	0.15297E-04	0.17860E-04	0.20463E-04	0.23094E-04				

ROW 6

0.42373E-04	0.27830E-04	0.18181E-04	0.11628E-04	0.62007E-05	0.61896E-04	0.47387E-04	0.34873E-04	0.24968E-04
0.16592E-04	0.78254E-04	0.64644E-04	0.51754E-04	0.40255E-04	0.29884E-04	0.98908E-04	0.77765E-04	0.64961E-04
0.52952E-04	0.41667E-04	0.18363E-03	0.90677E-04	0.77979E-04	0.65753E-04	0.53946E-04	0.11631E-03	0.10351E-03
0.98885E-04	0.78556E-04	0.66474E-04	0.12902E-03	0.11631E-03	0.10372E-03	0.91344E-04	0.79128E-04	0.14177E-03
0.12909E-03	0.11652E-03	0.10411E-03	0.91841E-04					

ROW 7

0.23978E-04	0.18824E-04	0.14888E-04	0.10110E-04	0.45279E-04	0.40859E-04	0.34182E-04	0.28073E-04	0.22613E-04
0.61456E-04	0.55549E-04	0.49398E-04	0.43130E-04	0.37059E-04	0.73986E-04	0.67879E-04	0.61658E-04	0.55366E-04
0.49139E-04	0.86391E-04	0.80199E-04	0.73945E-04	0.67658E-04	0.61381E-04	0.98754E-04	0.92523E-04	0.86268E-04
0.79974E-04	0.73684E-04	0.11118E-03	0.10485E-03	0.98585E-04	0.92380E-04	0.86089E-04	0.12344E-03	0.11718E-03
0.11092E-03	0.10463E-03	0.98349E-04						

ROW 8

0.19296E-04	0.17288E-04	0.14689E-04	0.12811E-04	0.33162E-04	0.32999E-04	0.31462E-04	0.29898E-04	0.47758E-04
0.47540E-04	0.46963E-04	0.45744E-04	0.44810E-04	0.59618E-04	0.59184E-04	0.58368E-04	0.57258E-04	0.55844E-04
0.71401E-04	0.70716E-04	0.69891E-04	0.68839E-04	0.67612E-04	0.83136E-04	0.82356E-04	0.81482E-04	0.88464E-04
0.79348E-04	0.94848E-04	0.94011E-04	0.93113E-04	0.92114E-04	0.91042E-04	0.10653E-03	0.10560E-03	0.10477E-03
0.10378E-03	0.10273E-03							

ROW 9

0.20488E-04	0.21898E-04	0.23807E-04	0.26471E-04	0.38396E-04	0.34124E-04	0.38035E-04	0.35665E-04	0.39229E-04
0.43576E-04	0.47482E-04	0.50937E-04	0.46146E-04	0.50893E-04	0.54879E-04	0.57996E-04	0.61765E-04	0.56733E-04
0.60695E-04	0.64667E-04	0.68598E-04	0.72465E-04	0.67352E-04	0.71314E-04	0.75276E-04	0.79213E-04	0.83118E-04
0.77979E-04	0.81946E-04	0.85895E-04	0.89835E-04	0.93758E-04	0.88608E-04	0.92567E-04	0.96528E-04	0.10046E-03
0.10439E-03								

ROW 10

0.30394E-04	0.14767E-04	0.20879E-04	0.26712E-04	0.35122E-04	0.45119E-04	0.24867E-04	0.31196E-04	0.38935E-04
0.47685E-04	0.57126E-04	0.32653E-04	0.48375E-04	0.48516E-04	0.57245E-04	0.66373E-04	0.41574E-04	0.49627E-04
0.57949E-04	0.66638E-04	0.75558E-04	0.50658E-04	0.58891E-04	0.67299E-04	0.75938E-04	0.84732E-04	0.59826E-04
0.68149E-04	0.76597E-04	0.85211E-04	0.93936E-04	0.69833E-04	0.77390E-04	0.85863E-04	0.94469E-04	0.18316E-03

ROW 11

0.11074E-03	0.85748E-04	0.66234E-04	0.50365E-04	0.36488E-04	0.15018E-03	0.12556E-03	0.10295E-03	0.83195E-04
0.65326E-04	0.17933E-03	0.15543E-03	0.13245E-03	0.11128E-03	0.91382E-04	0.28797E-03	0.18455E-03	0.16164E-03
0.13974E-03	0.11875E-03	0.23653E-03	0.21339E-03	0.19059E-03	0.16841E-03	0.14678E-03	0.26511E-03	0.24212E-03
0.21938E-03	0.19788E-03	0.17514E-03	0.29373E-03	0.27080E-03	0.24809E-03	0.22573E-03	0.28365E-03	

ROW 12

0.76472E-04	0.65782E-04	0.55311E-04	0.45877E-04	0.12298E-03	0.11201E-03	0.10024E-03	0.88365E-04	0.77126E-04
0.15155E-03	0.13991E-03	0.12798E-03	0.11579E-03	0.10394E-03	0.17963E-03	0.16772E-03	0.15562E-03	0.14345E-03
0.13136E-03	0.28754E-03	0.19558E-03	0.18537E-03	0.17119E-03	0.15983E-03	0.23538E-03	0.22329E-03	0.21115E-03
0.19896E-03	0.18677E-03	0.26328E-03	0.25189E-03	0.23893E-03	0.22675E-03	0.21455E-03		

ROW 13

0.64769E-04	0.69996E-04	0.56369E-04	0.99734E-04	0.98653E-04	0.96953E-04	0.93712E-04	0.89532E-04	0.12671E-03
0.12548E-03	0.12296E-03	0.12081E-03	0.11641E-03	0.15557E-03	0.15156E-03	0.14925E-03	0.14642E-03	0.14322E-03
0.18833E-03	0.17811E-03	0.17568E-03	0.17293E-03	0.16905E-03	0.28701E-03	0.28469E-03	0.28226E-03	0.19950E-03
0.19468E-03	0.23366E-03	0.23129E-03	0.22878E-03	0.22689E-03	0.22327E-03			

ROW 14

0.66442E-04	0.69219E-04	0.79372E-04	0.85356E-04	0.91858E-04	0.98879E-04	0.10518E-03	0.10582E-03	0.11002E-03
0.11668E-03	0.12299E-03	0.12889E-03	0.12834E-03	0.13484E-03	0.14141E-03	0.14786E-03	0.15489E-03	0.15519E-03
0.15972E-03	0.16626E-03	0.17274E-03	0.17912E-03	0.17888E-03	0.18462E-03	0.19115E-03	0.19763E-03	0.20487E-03
0.20298E-03	0.20952E-03	0.21685E-03	0.22254E-03	0.22988E-03				

ROW 15

0.84899E-04	0.68478E-04	0.72589E-04	0.85558E-04	0.10855E-03	0.11714E-03	0.81567E-04	0.94847E-04	0.10896E-03
0.12434E-03	0.14852E-03	0.16352E-03	0.11754E-03	0.13215E-03	0.14754E-03	0.16342E-03	0.12598E-03	0.14034E-03
0.15518E-03	0.17852E-03	0.18618E-03	0.14658E-03	0.16315E-03	0.17899E-03	0.19339E-03	0.20893E-03	0.17128E-03
0.18595E-03	0.20894E-03	0.21622E-03	0.23178E-03					

ROW 16

0.22717E-03	0.19158E-03	0.16886E-03	0.13386E-03	0.19899E-03	0.20194E-03	0.24597E-03	0.2123/E-03	0.18197E-03
0.15378E-03	0.33354E-03	0.29833E-03	0.26413E-03	0.23196E-03	0.28141E-03	0.38449E-03	0.34978E-03	0.31594E-03
0.28259E-03	0.25872E-03	0.43531E-03	0.40875E-03	0.38665E-03	0.33538E-03	0.38883E-03	0.48615E-03	0.45168E-03
0.41759E-03	0.38416E-03	0.35131E-03						

ROW 17

0.17565E-03	0.15813E-03	0.14891E-03	0.12468E-03	0.24329E-03	0.22585E-03	0.20736E-03	0.18879E-03	0.17896E-03
0.29369E-03	0.27544E-03	0.25666E-03	0.23774E-03	0.21913E-03	0.34351E-03	0.32489E-03	0.30688E-03	0.28699E-03
0.26898E-03	0.39389E-03	0.37431E-03	0.35537E-03	0.33634E-03	0.31755E-03	0.44258E-03	0.42374E-03	0.40477E-03
0.38572E-03	0.36667E-03							

ROW 18

0.15487E-03	0.14863E-03	0.14147E-03	0.28875E-03	0.28555E-03	0.28161E-03	0.19588E-03	0.1889/E-03	0.29883E-03
0.25382E-03	0.24859E-03	0.24312E-03	0.23698E-03	0.38479E-03	0.38055E-03	0.29589E-03	0.2985/E-03	0.28477E-03
0.35268E-03	0.34814E-03	0.34336E-03	0.33813E-03	0.33256E-03	0.48833E-03	0.39577E-03	0.39894E-03	0.38574E-03
0.38827E-03								

ROW 19

0.15688E-03	0.16862E-03	0.17778E-03	0.18522E-03	0.19371E-03	0.28188E-03	0.28845E-03	0.22198E-03	0.23824E-03
0.23883E-03	0.24713E-03	0.25482E-03	0.26697E-03	0.27546E-03	0.28482E-03	0.29242E-03	0.38834E-03	0.31271E-03
0.32874E-03	0.32928E-03	0.33772E-03	0.34682E-03	0.35749E-03	0.36683E-03	0.37457E-03	0.38384E-03	0.39148E-03

ROW 20

-0.18248E-03	0.14764E-03	0.16246E-03	0.18449E-03	0.28567E-03	0.22862E-03	0.1881/E-03	0.2873HE-03	0.22/62E-03
0.24935E-03	0.27286E-03	0.29968E-03	0.24973E-03	0.27854E-03	0.29236E-03	0.31478E-03	0.27171E-03	0.29228E-03
0.31327E-03	0.33587E-03	0.35732E-03	0.31397E-03	0.33467E-03	0.35587E-03	0.37767E-03	0.39983E-03	

ROW 21

0.36582E-03	0.32898E-03	0.28854E-03	0.24394E-03	0.28962E-03	0.44312E-03	0.39769E-03	0.35451E-03	0.31456E-03
0.27679E-03	0.51726E-03	0.47241E-03	0.42863E-03	0.38695E-03	0.34696E-03	0.59878E-03	0.54621E-03	0.50237E-03
0.45992E-03	0.41873E-03	0.66417E-03	0.61971E-03	0.57588E-03	0.53299E-03	0.49122E-03		

ROW 22

0.29899E-03	0.27541E-03	0.25289E-03	0.22976E-03	0.39455E-03	0.37113E-03	0.34669E-03	0.32192E-03	0.29796E-03
0.46698E-03	0.44264E-03	0.41781E-03	0.39278E-03	0.36803E-03	0.53863E-03	0.51481E-03	0.48985E-03	0.46592E-03
0.43887E-03	0.61815E-03	0.59537E-03	0.26833E-03	0.53512E-03	0.50996E-03			

ROW 23

0.26968E-03	0.26891E-03	0.25110E-03	0.34993E-03	0.34429E-03	0.33786E-03	0.32958E-03	0.32096E-03	0.41942E-03
0.41328E-03	0.48629E-03	0.39873E-03	0.38937E-03	0.48873E-03	0.48215E-03	0.47583E-03	0.46718E-03	0.45861E-03
0.55791E-03	0.55115E-03	0.54394E-03	0.53607E-03	0.52775E-03				

ROW 24

0.26928E-03	0.27489E-03	0.38879E-03	0.31734E-03	0.32686E-03	0.33595E-03	0.34361E-03	0.37391E-03	0.3832/E-03
0.39288E-03	0.48219E-03	0.41887E-03	0.43986E-03	0.44938E-03	0.45898E-03	0.46848E-03	0.47749E-03	0.58593E-03
0.51551E-03	0.52513E-03	0.53461E-03	0.54387E-03					

ROW 25

0.39118E-03	0.26891E-03	0.29188E-03	0.31453E-03	0.34027E-03	0.36783E-03	0.32979E-03	0.35332E-03	0.37898E-03
0.40433E-03	0.43171E-03	0.39174E-03	0.41681E-03	0.44126E-03	0.46772E-03	0.49491E-03	0.45412E-03	0.47877E-03
0.59439E-03	0.53884E-03	0.55794E-03						

DALTON PRINTING CORP. - BUENA PARK, CALIF. 90620

ROW 26

0.55423E-03	0.49907E-03	0.44853E-03	0.40187E-03	0.35755E-03	0.65858E-03	0.60270E-03	0.54922E-03	0.49920E-03
0.45151E-03	0.75982E-03	0.70428E-03	0.65002E-03	0.59822E-03	0.54848E-03	0.86058E-03	0.80503E-03	0.75042E-03
0.69771E-03	0.64698E-03							

ROW 27

0.47059E-03	0.44043E-03	0.41047E-03	0.38147E-03	0.59902E-03	0.56903E-03	0.53786E-03	0.50649E-03	0.47583E-03
0.69763E-03	0.66683E-03	0.63530E-03	0.60351E-03	0.57204E-03	0.79570E-03	0.76453E-03	0.73277E-03	0.70075E-03
0.66895E-03								

ROW 28

0.43166E-03	0.41978E-03	0.40684E-03	0.54359E-03	0.53505E-03	0.52558E-03	0.51485E-03	0.50134E-03	0.63867E-03
0.62966E-03	0.61975E-03	0.60848E-03	0.59624E-03	0.73360E-03	0.72430E-03	0.71422E-03	0.70383E-03	0.69186E-03

ROW 29

0.42859E-03	0.43465E-03	0.49147E-03	0.50091E-03	0.51090E-03	0.52044E-03	0.52852E-03	0.58209E-03	0.59195E-03
0.60209E-03	0.61188E-03	0.62094E-03	0.67387E-03	0.68311E-03	0.69333E-03	0.70331E-03	0.71276E-03	

ROW 30

0.46512E-03	0.44145E-03	0.46733E-03	0.49477E-03	0.52466E-03	0.55649E-03	0.52711E-03	0.55418E-03	0.58276E-03
0.61336E-03	0.64518E-03	0.61355E-03	0.64129E-03	0.67051E-03	0.70144E-03	0.73327E-03		

ROW 31

0.80123E-03	0.73474E-03	0.67316E-03	0.61589E-03	0.56125E-03	0.93731E-03	0.86964E-03	0.80475E-03	0.74402E-03
0.68622E-03	0.10706E-02	0.10027E-02	0.93640E-03	0.87354E-03	0.81389E-03			

ROW 32

0.69915E-03	0.66174E-03	0.62447E-03	0.58817E-03	0.86533E-03	0.82826E-03	0.78969E-03	0.75085E-03	0.71285E-03
0.99477E-03	0.95684E-03	0.91767E-03	0.87808E-03	0.83921E-03				

ROW 33

0.64943E-03	0.63377E-03	0.61689E-03	0.79883E-03	0.78634E-03	0.77341E-03	0.75801E-03	0.74118E-03	0.92295E-03
0.91093E-03	0.89762E-03	0.88238E-03	0.86583E-03					

ROW 34

0.64252E-03	0.64845E-03	0.73476E-03	0.74420E-03	0.75432E-03	0.76388E-03	0.77176E-03	0.85448E-03	0.86441E-03
0.87489E-03	0.88492E-03	0.89374E-03						

ROW 35

0.68286E-03	0.67493E-03	0.70271E-03	0.73352E-03	0.76739E-03	0.80347E-03	0.78820E-03	0.81797E-03	0.85015E-03
0.88516E-03	0.92163E-03							

ROW 36

0.11167E-02	0.10368E-02	0.96266E-03	0.89481E-03	0.82891E-03	0.12907E-02	0.12081E-02	0.11292E-02	0.10563E-02
0.98829E-03								

ROW 37

0.99355E-03	0.94784E-03	0.90228E-03	0.85799E-03	0.12038E-02	0.11582E-02	0.11106E-02	0.10626E-02	0.10165E-02

ROW 38

0.93165E-03	0.91140E-03	0.88956E-03	0.11215E-02	0.11067E-02	0.10901E-02	0.10698E-02	0.10477E-02

ROW 39

0.91988E-03	0.92498E-03	0.10458E-02	0.10558E-02	0.10656E-02	0.10754E-02	0.10824E-02

ROW 40

0.96371E-03	0.97392E-03	0.10046E-02	0.10388E-02	0.10776E-02	0.11189E-02

ROW 41

0.15176E-02	0.14162E-02	0.13249E-02	0.12423E-02	0.11663E-02

ROW 42

0.13644E-02	0.13073E-02	0.12504E-02	0.11969E-02

ROW 43

0.12073E-02	0.12611E-02	0.12324E-02

ROW 44

0.12787E-02 0.12741E-02

ROW 45

0.13282E-02

REDUCED UPPER TRIANGULAR WEIGHT MATRIX

ROW 1

0.42674E-03	0.22531E-03	-0.88832E-04	0.32853E-04	-0.11392E-04	0.32178E-04	0.10449E-03	-0.42987E-04	0.21685E-04
-0.88666E-05	-0.19228E-04	-0.62691E-04	0.23576E-05	-0.25422E-05	-0.53108E-07	0.83799E-05	0.25211E-04	0.64358E-05
0.57877E-07	0.45331E-06	-0.25548E-05	-0.87592E-05	-0.39842E-05	-0.13938E-06	-0.13665E-06	0.95963E-06	0.28564E-05
0.15961E-05	0.21784E-06	0.38647E-07	-0.38870E-06	-0.88872E-06	-0.59512E-06	-0.12799E-06	-0.28763E-07	0.98121E-07
0.26547E-06	0.18943E-06	0.54211E-07	0.95388E-08	-0.21171E-07	-0.65284E-07	-0.42977E-07	-0.15314E-07	-0.33498E-08

ROW 2

0.13172E-02	0.58825E-04	-0.59192E-05	0.31935E-04	0.86641E-05	0.24982E-03	0.33351E-04	-0.14617E-04	0.18266E-04
-0.84894E-08	-0.62987E-04	-0.51198E-04	-0.16694E-05	-0.74728E-06	0.15038E-05	0.24458E-04	0.22675E-04	0.59088E-05
0.48577E-06	-0.64451E-06	-0.75389E-05	-0.85717E-05	-0.38738E-05	-0.38832E-06	0.25818E-06	0.21624E-05	0.20826E-05
0.13432E-05	0.25823E-06	-0.85836E-07	-0.68235E-06	-0.81723E-06	-0.49493E-06	-0.14881E-06	0.24359E-07	0.15941E-06
0.22662E-06	0.15631E-06	0.57544E-07	-0.23483E-08	-0.34191E-07	-0.48189E-07	-0.35639E-07	-0.16113E-07	

ROW 3

0.13895E-02	0.52486E-04	-0.78875E-04	-0.16701E-04	-0.44856E-04	0.24359E-03	0.32085E-04	-0.32743E-04	0.98728E-06
-0.57516E-05	-0.55274E-04	-0.69882E-04	-0.48788E-05	-0.47779E-06	0.28489E-05	0.21101E-04	0.22971E-04	0.59168E-05
0.13885E-06	-0.89597E-06	-0.63222E-05	-0.87348E-05	-0.33816E-05	-0.34889E-07	0.24032E-06	0.1736/E-05	0.26422E-05
0.14188E-05	0.19298E-07	-0.71950E-07	-0.47893E-06	-0.77781E-06	-0.54330E-06	-0.38252E-08	0.16279E-07	0.12231E-06
0.28250E-06	0.17865E-06	0.55859E-09	-0.34371E-08	-0.24781E-07	-0.41914E-07	-0.42411E-07		

ROW 4

0.13359E-02	0.21947E-03	0.66937E-05	0.98966E-05	-0.42888E-04	0.24238E-03	0.95517E-04	0.15786E-06	0.15482E-05
-0.33898E-05	-0.68475E-04	-0.53682E-04	0.87078E-07	0.21888E-06	0.21583E-05	0.24832E-04	0.25836E-04	-0.81563E-07
0.13724E-06	-0.14281E-05	-0.68186E-05	-0.18536E-04	0.19865E-07	-0.27495E-07	0.46529E-06	0.17188E-05	0.32924E-05
-0.66283E-08	0.54168E-06	-0.14572E-06	-0.43173E-06	-0.18184E-05	0.22451E-08	-0.34342E-08	0.43758E-07	0.89321E-07
0.28888E-06	-0.41344E-09	0.22777E-09	-0.86044E-08	-0.17262E-07	-0.61923E-07			

ROW 5

0.35848E-03	-0.42519E-05	0.18113E-04	-0.26345E-04	0.31474E-04	0.54589E-04	0.19826E-06	-0.11689E-05	0.48886E-05
-0.81151E-05	-0.27452E-04	-0.21594E-07	0.29244E-08	-0.26473E-06	0.13456E-05	0.28441E-05	-0.23441E-07	0.11344E-06
-0.22265E-06	0.75144E-07	-0.34131E-05	0.61961E-09	-0.29699E-07	0.74182E-07	-0.76113E-07	0.93444E-06	-0.15846E-08
0.73543E-08	-0.22457E-07	0.38072E-07	-0.25668E-06	0.38229E-09	-0.26224E-08	0.75580E-08	-0.12829E-07	0.65798E-07
-0.18435E-09	0.34557E-09	-0.12833E-08	0.26389E-08	-0.13592E-07				

ROW 6

0.43484E-03	0.23688E-03	-0.87688E-04	0.35859E-04	-0.14336E-04	0.31334E-04	0.98929E-04	-0.48568E-04	0.21816E-04
-0.83883E-05	-0.23446E-04	-0.67156E-04	0.68489E-06	-0.22638E-05	-0.26375E-06	0.62874E-05	0.21397E-04	0.63431E-05
-0.58184E-06	0.51257E-06	-0.26978E-05	-0.76272E-05	-0.33288E-05	-0.32824E-07	-0.87718E-07	0.86993E-06	0.24556E-05
0.13724E-05	0.14887E-06	0.22891E-07	-0.26689E-06	-0.76787E-06	-0.47249E-06	-0.87734E-07	-0.82854E-08	0.69157E-07
0.20414E-06	0.11371E-06	0.31246E-07	0.38323E-08					

ROW 7

0.14142E-02	0.52578E-04	-0.38556E-05	0.36259E-04	0.78685E-05	0.22896E-03	0.22331E-04	-0.13991E-04	0.16679E-04
-0.39925E-06	-0.59846E-04	-0.51512E-04	-0.23289E-05	-0.19672E-06	0.69746E-06	0.28545E-04	0.19684E-04	0.39192E-05
-0.82899E-07	-0.43761E-06	-0.57383E-05	-0.66889E-05	-0.24641E-05	-0.28162E-06	0.14111E-06	0.16485E-05	0.21182E-05
0.10478E-05	0.18286E-06	-0.46344E-07	-0.43874E-06	-0.68329E-06	-0.35968E-06	-0.93873E-07	0.11124E-07	0.97987E-07
0.13677E-06	0.89833E-07	0.38715E-07						

ROW 8

0.13941E-02	0.53518E-04	-0.88938E-04	-0.16885E-04	-0.44564E-04	0.22129E-03	0.23246E-04	-0.29582E-04	0.73869E-06
-0.68559E-05	-0.55635E-04	-0.58117E-04	-0.45901E-05	-0.35089E-06	0.14385E-05	0.18495E-04	0.28259E-04	0.46634E-05
0.14119E-06	-0.65857E-06	-0.58267E-05	-0.68466E-05	-0.25254E-05	-0.26895E-07	0.10412E-06	0.14268E-05	0.21318E-05
0.11357E-05	0.17681E-07	-0.44878E-07	-0.56694E-06	-0.58286E-06	-0.48592E-06	-0.19118E-06	0.11432E-07	0.78111E-07

[redacted]

NOT REPRODUCIBLE

ROW 9

0.14116E-02	0.24690E-03	0.67114E-05	0.85358E-05	-0.42959E-04	0.21874E-03	0.76885E-04	0.21297E-06	0.21784E-05
-0.39296E-05	-0.67958E-04	-0.51714E-04	0.95728E-07	-0.36462E-06	0.28348E-05	0.28514E-04	0.24323E-04	-0.48922E-07
0.78179E-06	-0.93239E-06	-0.53826E-05	-0.82504E-05	0.38223E-08	-0.40238E-07	0.38636E-06	0.14852E-05	0.26887E-05
-0.52224E-06	0.17467E-07	-0.99208E-07	-0.38457E-06	-0.79128E-06	0.52211E-09	-0.28034E-08	0.20596E-07	0.66397E-07
0.17797E-06								

ROW 10

0.48956E-03	-0.43598E-05	0.10200E-04	-0.26102E-04	0.25631E-04	0.37082E-04	0.10352E-06	-0.11187E-05	0.39641E-05
-0.61482E-05	-0.24173E-04	0.86784E-07	-0.12885E-06	-0.10268E-08	0.28014E-06	0.88826E-05	0.12854E-07	0.25848E-07
-0.23426E-07	0.18464E-06	-0.25581E-05	0.70188E-08	-0.18310E-07	0.24837E-07	-0.69539E-07	0.73225E-06	-0.27676E-09
0.57367E-08	-0.13361E-07	0.35997E-07	-0.19203E-06	0.30846E-09	-0.32517E-09	0.17828E-08	-0.67128E-08	0.41384E-07

ROW 11

0.42815E-03	0.23446E-03	-0.88382E-04	0.35848E-04	-0.14242E-04	0.49982E-04	0.11891E-03	-0.42662E-04	0.21787E-04
-0.83494E-05	-0.12429E-04	-0.51549E-04	0.11827E-05	-0.15933E-05	0.33547E-06	0.46259E-05	0.17523E-04	0.44759E-05
-0.58588E-06	0.24882E-06	-0.22685E-05	-0.62574E-05	-0.26229E-05	0.34129E-07	0.57788E-08	0.73769E-06	0.28428E-05
0.18028E-05	0.77836E-07	-0.11761E-07	-0.22522E-06	-0.62283E-06	-0.27222E-06	-0.53285E-07	0.15272E-08	

ROW 12

0.14186E-02	0.52554E-04	-0.48783E-05	0.36499E-04	0.18171E-04	0.24869E-03	0.39563E-04	-0.17369E-04	0.17287E-04
0.16943E-06	-0.48938E-04	-0.43161E-04	0.86431E-06	-0.14098E-05	0.35524E-06	0.18878E-04	0.14857E-04	0.27442E-05
0.13553E-06	-0.48768E-06	-0.49926E-05	-0.53754E-05	-0.17984E-05	-0.28561E-06	0.88440E-07	0.13673E-05	0.16593E-05
0.73228E-06	0.13959E-06	-0.33128E-07	-0.34152E-06	-0.48489E-06	-0.21055E-06	-0.55185E-07		

ROW 13

0.13956E-02	0.52229E-04	-0.48872E-04	-0.15686E-04	-0.42487E-04	0.24851E-03	0.48183E-04	-0.32326E-04	0.11794E-05
-0.38748E-05	-0.44988E-04	-0.43499E-04	0.14645E-05	-0.53817E-06	-0.76681E-06	0.15893E-04	0.15948E-04	0.24548E-05
0.38881E-06	-0.29573E-06	-0.42178E-05	-0.56237E-05	-0.16581E-05	-0.46688E-07	0.25994E-07	0.11218E-05	0.16593E-05
0.77243E-06	0.16672E-07	-0.33334E-07	-0.26559E-06	-0.41319E-06	-0.23311E-06			

ROW 14

0.14128E-02	0.24879E-03	0.63215E-05	0.88728E-05	-0.40287E-04	0.24134E-03	0.88785E-04	-0.13171E-06	0.29566E-05
-0.28592E-05	-0.54863E-04	-0.49617E-04	0.14799E-06	0.18316E-06	0.51217E-06	0.16647E-04	0.20882E-04	-0.10164E-06
0.15358E-06	-0.61135E-06	-0.45138E-05	-0.71677E-05	0.99372E-08	-0.31274E-07	0.20519E-06	0.10987E-05	0.22189E-05
-0.54249E-08	-0.38637E-08	-0.46889E-07	-0.26357E-06	-0.53738E-06				

ROW 15

0.41446E-03	-0.42558E-05	0.98981E-05	-0.26366E-04	0.25163E-04	0.48458E-04	-0.41558E-07	-0.38875E-06	0.28015E-05
-0.33611E-05	-0.22305E-04	-0.73461E-07	-0.15017E-07	-0.48885E-06	0.23258E-06	0.60183E-05	0.44648E-07	0.22851E-06
0.92458E-07	0.82763E-07	-0.21878E-05	0.25443E-08	-0.19771E-07	0.11254E-07	-0.92582E-07	0.58235E-06	0.28442E-06
0.38889E-08	0.16243E-08	0.13984E-07	-0.83616E-06					

ROW 16

0.38418E-03	0.28592E-03	-0.75278E-04	0.31686E-04	-0.12842E-04	-0.26977E-05	0.68974E-04	-0.33891E-04	0.15421E-04
-0.56418E-05	-0.86336E-05	-0.46841E-04	0.44837E-05	-0.22635E-05	0.47687E-06	0.44468E-05	0.14986E-04	0.35363E-05
-0.61631E-06	0.35424E-06	-0.17485E-05	-0.57241E-05	-0.21828E-05	0.12889E-06	-0.21512E-07	0.76817E-06	0.21442E-05
0.69878E-06	0.18255E-06	-0.16882E-07						

ROW 17

0.13258E-02	0.58447E-04	-0.98887E-06	0.31692E-04	0.43865E-05	0.13138E-03	-0.39583E-05	-0.13953E-04	0.18281E-04
0.71858E-05	-0.14272E-04	-0.38578E-04	-0.79668E-06	0.42895E-06	-0.89659E-06	0.11785E-04	0.18828E-04	0.25974E-05
-0.46458E-06	0.26758E-06	-0.28682E-05	-0.37178E-05	-0.14699E-05	-0.96856E-07	-0.76549E-08	0.97136E-06	0.12917E-05
0.53792E-06	0.69678E-07							

ROW 18

0.12959E-02	0.55412E-04	-0.77858E-04	-0.15345E-04	-0.54588E-04	0.13656E-03	-0.29272E-05	-0.28758E-04	-0.18328E-05
-0.86455E-05	-0.17026E-04	-0.28372E-04	-0.24948E-05	-0.29643E-06	-0.12178E-05	0.11631E-04	0.18947E-04	0.38643E-05
0.11284E-06	-0.39621E-06	-0.38883E-05	-0.39382E-05	-0.14815E-05	-0.75416E-08	0.12563E-06	0.92678E-06	0.13851E-05
0.59124E-06								

ROW 19

0.12979E-02	0.23597E-03	0.77763E-05	0.18449E-04	-0.52427E-04	0.13888E-03	0.34578E-04	0.14296E-05	0.61253E-05
-0.48452E-05	-0.26892E-04	-0.27818E-04	0.11864E-06	0.53773E-06	-0.76288E-06	0.12889E-04	0.1382/E-04	-0.28987E-07
0.34279E-06	-0.36618E-06	-0.38763E-05	-0.51914E-05	-0.53337E-08	0.75158E-08	0.91938E-07	0.14741E-05	0.15878E-05

NOT REPRODUCIBLE

WALTON PRINTING CORP. - QUEENS PARK, CALIF. 90022

ROW 20

0.41879E-03	-0.55991E-05	0.13278E-04	-0.38279E-04	0.23728E-04	-0.78775E-05	-0.83747E-06	0.37829E-06	0.13225E-05
-0.28135E-05	-0.18652E-04	-0.18134E-06	0.67192E-07	-0.56817E-06	0.34146E-06	0.39984E-05	0.51975E-06	-0.14286E-07
0.72889E-07	0.12139E-06	-0.13846E-05	-0.13871E-08	0.27418E-08	-0.27848E-07	0.31598E-07	0.44339E-06	

ROW 21

0.37538E-03	0.19018E-04	-0.67958E-04	0.28454E-04	-0.11642E-04	0.35821E-05	0.84799E-04	-0.37031E-04	0.17298E-04
-0.82741E-05	-0.18286E-04	-0.51769E-04	0.41977E-05	-0.27856E-05	0.28594E-06	0.41686E-05	0.15875E-04	0.32631E-05
-0.71144E-06	0.41208E-06	-0.25848E-05	-0.67167E-05	-0.16224E-05	-0.13958E-06	0.22681E-07		

ROW 22

0.11344E-02	0.54817E-04	-0.12822E-05	0.27278E-04	0.75739E-05	0.17461E-03	0.14607E-04	-0.13113E-04	0.11239E-04
0.67883E-05	-0.26181E-04	-0.39887E-04	0.12841E-06	0.38684E-06	-0.76254E-06	0.13635E-04	0.11596E-04	0.23563E-05
-0.55175E-06	0.76498E-07	-0.37288E-05	-0.41978E-05	-0.13148E-05	-0.93618E-07			

ROW 23

0.11323E-02	0.47261E-04	-0.63576E-04	-0.14439E-04	-0.56188E-04	0.18459E-03	0.12889E-04	-0.21744E-04	-0.28946E-05
-0.89836E-05	-0.26875E-04	-0.37488E-04	-0.31816E-05	-0.54734E-06	-0.15999E-05	0.13258E-04	0.12235E-04	0.31292E-05
-0.28998E-07	-0.72746E-06	-0.36496E-05	-0.44774E-05	-0.13859E-05				

ROW 24

0.11494E-02	0.19466E-03	0.82519E-05	0.16860E-04	-0.58618E-04	0.17982E-03	0.55465E-04	0.28624E-05	0.57838E-05
-0.53732E-05	-0.16754E-04	-0.15688E-04	0.29432E-06	0.62982E-06	-0.93427E-06	0.12668E-04	0.15265E-04	0.44897E-07
0.14692E-06	-0.38149E-06	-0.44814E-05	-0.49493E-05					

ROW 25

0.35349E-03	-0.57088E-05	0.12881E-04	-0.28383E-04	0.26253E-04	0.21934E-04	-0.11865E-05	0.22158E-06	-0.19956E-07
-0.15778E-05	-0.18338E-04	-0.15618E-06	-0.71521E-07	-0.16982E-06	-0.24412E-06	0.55489E-05	-0.44318E-06	-0.10141E-06
0.21591E-06	-0.28859E-06	-0.18411E-05						

ROW 26

0.37165E-03	0.18886E-03	-0.68278E-04	0.28760E-04	-0.11625E-04	0.25966E-05	0.83989E-04	-0.37558E-04	0.16958E-04
-0.63158E-05	-0.79281E-05	-0.48333E-04	0.62645E-05	-0.23739E-05	0.35184E-06	0.78149E-05	0.18223E-04	0.38792E-06
0.65256E-06	0.94997E-07							

ROW 27

0.11284E-02	0.48811E-04	-0.28912E-06	0.27173E-04	0.85872E-05	0.17842E-03	0.14619E-04	-0.12989E-04	0.11464E-04
0.76936E-05	-0.22764E-04	-0.36894E-04	0.14911E-05	0.24958E-06	-0.18773E-06	0.15126E-04	0.11262E-04	0.17289E-05
-0.31879E-06								

ROW 28

0.11273E-02	0.41429E-04	-0.63339E-04	-0.17862E-04	-0.55838E-04	0.18712E-03	0.11928E-04	-0.22238E-04	-0.26566E-05
-0.77665E-05	-0.23575E-04	-0.33369E-04	-0.18656E-05	-0.13336E-06	-0.46688E-07	0.14762E-04	0.12022E-04	0.25249E-05

ROW 29

0.11377E-02	0.18932E-03	0.89315E-05	0.15459E-04	-0.58254E-04	0.18158E-03	0.56836E-04	0.19488E-05	0.62885E-05
-0.43738E-05	-0.51888E-04	-0.31847E-04	0.41598E-07	0.18856E-05	-0.56742E-06	0.16558E-04	0.12866E-04	

ROW 30

0.34313E-03	-0.59176E-05	0.13888E-04	-0.28627E-04	0.26656E-04	0.24387E-04	-0.12457E-05	0.18735E-05	-0.43514E-06
0.12783E-06	-0.17226E-04	-0.14651E-06	0.85431E-07	-0.57764E-06	0.13276E-05	0.59915E-05		

ROW 31

0.37543E-03	0.19892E-03	-0.66898E-04	0.28529E-04	-0.11614E-04	-0.37849E-05	0.76134E-04	-0.42823E-04	0.17886E-04
-0.65537E-05	-0.19658E-04	-0.56517E-04	0.11374E-04	-0.52279E-05	0.11888E-05			

ROW 32

0.11233E-02	0.51889E-04	0.38663E-06	0.27848E-04	0.53918E-05	0.16633E-03	0.59456E-05	-0.15268E-04	0.12262E-04
0.33859E-05	-0.35531E-04	-0.39998E-04	0.33389E-05	-0.66187E-07				

ROW 33

0.11262E-02	0.44478E-04	-0.62728E-04	-0.19875E-04	-0.62884E-04	0.17534E-03	0.59915E-06	-0.25884E-04	-0.19756E-05
-0.12772E-04	-0.33678E-04	-0.37262E-04	-0.23582E-05					

```
  0.17536E-02   0.19177E-03   0.95533E-05   0.15485E-04  -0.63407E-04   0.16349E-03   0.46444E-04   0.12450E-05   0.45978E-05
 -0.80667E-05  -0.48066E-04  -0.27971E-04

ROW  35
  0.34431E-03  -0.53752E-05   0.12055E-04  -0.26919E-04   0.19448E-04   0.18243E-04  -0.50716E-06  -0.98961E-06   0.35058E-05
 -0.82106E-05  -0.28318E-04

ROW  36
  0.37790E-03   0.20266E-03  -0.63590E-04   0.26782E-04  -0.12811E-04   0.54121E-04   0.12836E-03  -0.64325E-04   0.32645E-04
 -0.11790E-04

ROW  37
  0.11650E-02   0.63533E-04   0.42860E-05   0.28868E-04   0.12725E-05   0.21657E-03   0.29524E-04  -0.13342E-04   0.12585E-04

ROW  38
  0.11611E-02   0.58684E-04  -0.66270E-04  -0.29481E-05  -0.28376E-04   0.22872E-03   0.23345E-04  -0.16692E-04

ROW  39
  0.11925E-02   0.21602E-03   0.13571E-05   0.17752E-04  -0.35853E-04   0.23341E-03   0.43886E-04

ROW  40
  0.36888E-03  -0.36202E-05   0.13818E-04  -0.34365E-04   0.54163E-04   0.42861E-04

ROW  41
  0.86339E-04   0.59140E-04  -0.34844E-04   0.16584E-04  -0.66648E-05

ROW  42
  0.49326E-03  -0.82155E-04   0.26318E-04   0.11511E-04

ROW  43
  0.53042E-03  -0.77828E-04  -0.26293E-04

ROW  44
  0.47355E-03   0.51216E-04

ROW  45
  0.12485E-03
```

NOT REPRODUCIBLE

HERE ARE THE EIGENVALUES AND EIGENVECTORS

EIGENVECTOR NUMBER 1
CORRESPONDING TO 2.3080233E 07

2.7602883E-02	2.4613866E-02	2.2600860E-02	2.0003531E-02	1.5602752E-02	1.0008479E-01
9.4502941E-02	8.8999889E-02	8.2161925E-02	7.3517372E-02	2.0042876E-01	1.9975108E-01
1.9089256E-01	1.8057862E-01	1.6869399E-01	3.4305413E-01	3.3147199E-01	3.1977424E-01
3.0688734E-01	2.9272816E-01	4.6435702E-01	4.5083028E-01	4.3731815E-01	4.2292609E-01
4.0766739E-01	5.9391283E-01	5.7885303E-01	5.6392713E-01	5.4846159E-01	5.3241800E-01
7.2793315E-01	7.1192262E-01	6.9602641E-01	6.7983838E-01	6.6330605E-01	8.6379205E-01
8.4729429E-01	8.3081412E-01	8.1418263E-01	7.9738332E-01	1.0000000E 00	9.0328007E-01
9.6645270E-01	9.4954168E-01	9.3259875E-01			

EIGENVECTOR NUMBER 2
CORRESPONDING TO 4.6667938E 08

8.4521588E-02	2.7716656E-02	-1.1120344E-02	-4.3763835E-02	-7.1016606E-02	2.3301334E-01
9.2732017E-02	-2.9466605E-02	-1.4090670E-01	-2.4238270E-01	3.9605939E-01	1.6881804E-01
-4.4704918E-02	-2.4728302E-01	-4.3555829E-01	5.5615921E-01	2.4724515E-01	-5.1694717E-02
-3.4073756E-01	-6.1484224E-01	6.7345674E-01	3.0968466E-01	-4.8498577E-02	-3.9768944E-01
-7.3168081E-01	7.7882996E-01	3.7908765E-01	-3.6522780E-02	-4.3555400E-01	-8.2042403E-01
8.6067576E-01	4.2622812E-01	-1.7440434E-02	-4.5513627E-01	-8.7978074E-01	9.4188306E-01
4.7694368E-01	6.4490448E-03	-4.5913664E-01	-9.1155995E-01	1.0000000E 00	5.2181527E-01
3.2745646E-02	-4.5324994E-01	-9.2303551E-01			

EIGENVECTOR NUMBER 3
CORRESPONDING TO 8.6056776E 08

-1.7472961E-01	-1.3291736E-01	-1.1394686E-01	-9.9538638E-02	-7.8648055E-02	-4.9031451E-01
-4.1778718E-01	-3.6911288E-01	-3.3318375E-01	-2.9975693E-01	-7.5073852E-01	-6.6552919E-01
-6.0818751E-01	-5.5308467E-01	-5.1737111E-01	-8.2059821E-01	-7.4191869E-01	-6.7591431E-01
-6.2951532E-01	-5.9964417E-01	-6.9360436E-01	-6.3057942E-01	-5.7327298E-01	-5.3329092E-01
-5.0000900E-01	-4.0529455E-01	-3.6210532E-01	-3.1827405E-01	-2.8695597E-01	-2.6891975E-01
-6.6969213E-04	2.6463973E-02	5.7129134E-02	8.0147580E-02	9.3307679E-02	4.6549727E-01
4.8339429E-01	5.0431829E-01	5.2125943E-01	5.3187963E-01	9.4864627E-01	9.6285614E-01
9.7754835E-01	9.9049134E-01	1.0000000E 00			

EIGENVECTOR NUMBER 4
CORRESPONDING TO 4.7778326E 09

-1.8434288E-01	-5.4622611E-02	4.6235613E-02	1.3094083E-01	1.8864206E-01	-4.5213036E-01
-1.7357266E-01	1.0157838E-01	3.5500620E-01	5.6280112E-01	-6.1972366E-01	-2.7715041E-01
9.6596537E-02	4.6018679E-01	7.7424290E-01	-5.8752232E-01	-3.0683086E-01	2.8691754E-02
3.7136117E-01	6.8224669E-01	-3.9364688E-01	-2.4537838E-01	-3.8802992E-02	1.8893366E-01
4.0903677E-01	-6.7553564E-02	-9.8757267E-02	-7.9457745E-02	-2.9682258E-02	4.2292670E-02
3.2896568E-01	1.1056918E-01	-7.3880783E-02	-2.2086297E-01	-3.1808983E-01	6.9825037E-01
3.4000556E-01	-1.9957328E-02	-3.4389595E-01	-5.9400389E-01	1.0000000E 00	5.5853499E-01
6.0180090E-02	-4.0634205E-01	-7.6601481E-01			

EIGENVECTOR NUMBER 5
CORRESPONDING TO 6.8554168E 09

4.5120638E-01	3.1571991E-01	2.4941325E-01	1.9732443E-01	1.3463953E-01	9.2440528E-01
7.5218927E-01	6.0713728E-01	4.8753393E-01	3.8472696E-01	7.9186688E-01	6.9836497E-01
5.6379338E-01	4.3608418E-01	3.3485021E-01	1.0734303E-01	1.3185138E-01	7.6716151E-02
-7.1782513E-03	-8.5684123E-02	-4.7056501E-01	-3.8204998E-01	-3.6652766E-01	-4.0269955E-01
-4.6149263E-01	-7.2385737E-01	-6.1948869E-01	-5.5535474E-01	-5.5164922E-01	-5.9208911E-01
-5.1329479E-01	-4.2606978E-01	-3.4152980E-01	-3.1033447E-01	-3.3278939E-01	5.3469271E-02
1.2469916E-01	2.1303578E-01	2.6362756E-01	2.6071657E-01	7.5522063E-01	8.2758456E-01
9.1727512E-01	9.8368147E-01	1.0000000E 00			

EIGENVECTOR NUMBER 6
CORRESPONDING TO 1.6728392E 10

2. [illegible]	7. [illegible]	-6. [illegible]	-1. [illegible]	-1. [illegible]	4. [illegible]

NOT REPRODUCIBLE

NOT REPRODUCIBLE

1.8374419E-01	-1.0971955E-01	-3.2108502E-01	-4.3014405E-01	3.7803074E-01	1.4978124E-01
-7.8648933E-02	-2.1143981E-01	-2.5773532E-01	2.0356195E-02	-4.3289540E-02	-4.4750703E-02
7.6863101E-02	2.4596607E-01	-2.0754352E-01	-2.1214836E-01	-6.8707703E-02	2.3883812E-01
5.8485234E-01	-1.8234120E-01	-2.6803589E-01	-1.3463532E-01	2.2392664E-01	6.5756324E-01
1.2955652E-01	-1.5326722E-01	-1.9555979E-01	5.0702436E-02	4.4606194E-01	5.8369401E-01
8.6926328E-02	-2.1190833E-01	-1.7798899E-01	9.1759127E-02	1.0000000E 00	3.4918105E-01
-1.8697699E-01	-3.7443474E-01	-2.4227099E-01			

EIGENVECTOR NUMBER 7
CORRESPONDING TO 1.7581530E 10

-7.9899879E-04	-4.2298745E-02	-1.1112433E-02	9.4331717E-02	2.0841379E-01	6.4204345E-02
-1.8361488E-01	-7.8228013E-02	1.7856699E-01	5.1883698E-01	2.7178799E-01	-1.1319053E-01
-2.1433201E-01	7.4782697E-02	5.5755368E-01	5.7348539E-01	-4.7469770E-02	-3.4759428E-01
-1.3489836E-01	3.8450168E-01	7.7271736E-01	2.5504850E-02	-3.9866822E-01	-2.3070084E-01
2.9537848E-01	8.3595598E-01	5.7731886E-02	-3.7748155E-01	-1.9577907E-01	3.7627295E-01
7.2932148E-01	-8.8137875E-04	-3.5768568E-01	-7.8684057E-02	5.9986255E-01	5.1555558E-01
-1.4274699E-01	-3.7744320E-01	5.1962728E-02	8.4396784E-01	2.7894278E-01	-3.2217439E-01
-4.4831139E-01	1.0988951E-01	1.0000000E 00			

EIGENVECTOR NUMBER 8
CORRESPONDING TO 2.6717637E 10

-6.6422898E-01	-5.1834882E-01	-4.2566898E-01	-3.0272487E-01	-1.4569813E-01	-7.1545954E-01
-7.7689942E-01	-6.7801231E-01	-4.6143628E-01	-2.1863632E-01	3.4030472E-01	3.8027935E-03
-8.1528161E-02	5.3331285E-02	2.6191633E-01	1.0000000E 00	6.9558218E-01	4.8331724E-01
4.9664128E-01	6.4961393E-01	5.2819531E-01	4.2422572E-01	2.6289889E-01	2.3829619E-01
3.3911129E-01	-3.7424886E-01	-2.9437837E-01	-3.2613491E-01	-3.4251438E-01	-3.8312624E-01
-7.0632885E-01	-6.1112380E-01	-5.4779873E-01	-5.5021271E-01	-5.8185568E-01	-1.4368387E-01
-1.0861166E-01	-2.5886772E-02	-1.9773670E-02	-9.9958384E-02	8.5456917E-01	8.7198748E-01
9.3986379E-01	9.5329414E-01	8.6956638E-01			

EIGENVECTOR NUMBER 9
CORRESPONDING TO 3.1568074E 10

-4.3032630E-01	-6.6936688E-03	1.6841061E-01	2.2613313E-02	-2.4785998E-01	-8.3947799E-01
-6.0494169E-03	3.9605455E-01	6.7673794E-02	-6.1876983E-01	-8.2626434E-01	8.0236925E-02
5.3105807E-01	1.0051482E-01	-7.8844956E-01	-5.0023042E-01	1.4670667E-01	4.6058816E-01
-7.7201818E-02	-6.8921923E-01	-1.9717286E-01	1.0064644E-01	2.3616518E-01	7.6976392E-03
-4.3976157E-01	9.8779875E-02	-1.6825669E-02	-5.9391835E-02	-5.6408183E-02	-6.7915549E-02
4.0938569E-01	-1.1007596E-01	-3.1425866E-01	-6.7874984E-02	3.7189735E-01	7.0955818E-01
-1.1926194E-01	-4.5843951E-01	-2.7583767E-02	7.6248514E-01	9.1383162E-01	-7.7596135E-02
-5.0794396E-01	1.6225758E-02	1.0000000E 00			

NOT REPRODUCIBLE

HERE ARE THE NATURAL FREQUENCIES

THE NATURAL FREQUENCY NUMBER	1	IS	764.618	CPS
THE NATURAL FREQUENCY NUMBER	2	IS	3438.187	CPS
THE NATURAL FREQUENCY NUMBER	3	IS	4668.888	CPS
THE NATURAL FREQUENCY NUMBER	4	IS	11881.887	CPS
THE NATURAL FREQUENCY NUMBER	5	IS	13177.622	CPS
THE NATURAL FREQUENCY NUMBER	6	IS	20579.985	CPS
THE NATURAL FREQUENCY NUMBER	7	IS	21183.287	CPS
THE NATURAL FREQUENCY NUMBER	8	IS	26814.728	CPS
THE NATURAL FREQUENCY NUMBER	9	IS	28274.123	CPS

REPRODUCED FROM BEST AVAILABLE COPY

Sample Problem No. 3

Missile Control Surface Model
(Modeled with beam elements and lumped weights)

Find first five natural modes and frequencies.

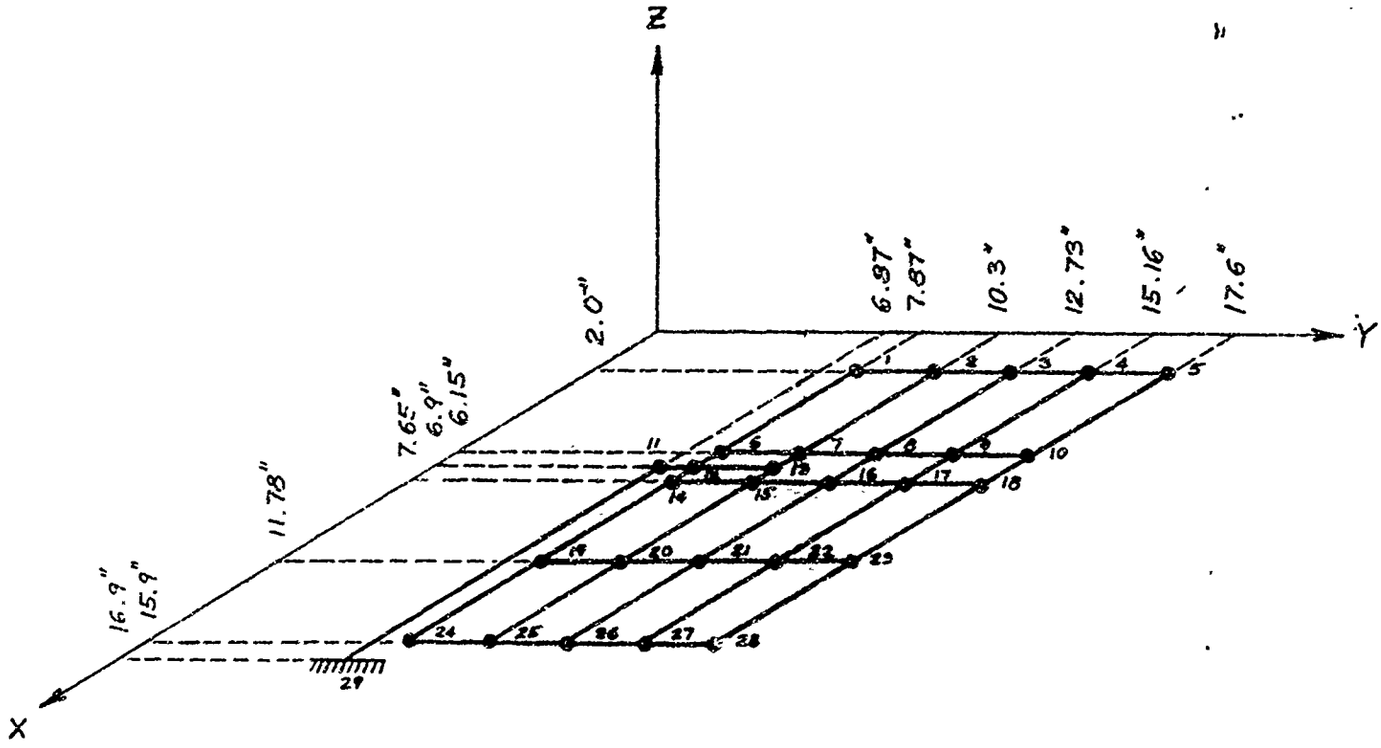

Note: Joint 11 is restrained from rotating about y

Lumped Masses

Joint No.	Mass lb.
1	0.050
2	0.110
3	0.115
4	0.125
5	0.196
6	0.155
7	0.305
8	0.305
9	0.305
10	0.165
11	0.060
12	0.165
13	0.005
14	0.183
15	0.325
16	0.310
17	0.280
18	0.140
19	0.062
20	0.078
21	0.078
22	0.078
23	0.080
24	0.033
25	0.051
26	0.051
27	0.051
28	0.042
29	0.050

Beam Element Properties

Member i - j	Moment-of-Inertia Area	Torsional Constant
	inch^4	
1-2	0.0009	0.0055
2-3	0.0009	0.0055
3-4	0.0009	0.0055
4-5	0.0018	0.0055
6-7	0.0164	0.0300
7-8	0.0164	0.0300
8-9	0.0164	0.0300
9-12	0.0164	0.0300
12-13	0.0160	0.0300
14-15	0.0147	0.0280
15-16	0.0147	0.0280
16-17	0.0147	0.0280
17-18	0.0147	0.0280
19-20	0.0053	0.0010
20-21	0.0053	0.0010
21-22	0.0053	0.0010
22-23	0.0053	0.0010
24-25	0.0031	0.0006
25-26	0.0031	0.0006
26-27	0.0031	0.0006
27-28	0.0031	0.0006
1-6	0.0013	0.0026
2-7	0.0027	0.0054
3-8	0.0027	0.0054
4-9	0.0027	0.0054
5-10	0.0026	0.0029
6-12	0.0503	0.1000
12-14	0.0503	0.1000
7-13	0.0255	0.0510
13-15	0.0255	0.0510
8-16	0.0380	0.0750
9-17	0.0380	0.0750
10-18	0.0377	0.0750
14-19	0.0017	0.0034
15-20	0.0035	0.0070
16-21	0.0035	0.0070
17-22	0.0035	0.0070
18-23	0.0017	0.0029
11-12	100.0000	0.0100
11-29	0.3200	0.0790
19-24	0.0017	0.0030
20-25	0.0017	0.0030
21-26	0.0035	0.0070
22-27	0.0035	0.0070
23-28	0.0017	0.0029

$E = 3 \times 10^7$ psi

$\nu = 0.3$

Listing of Input Data Cards

```
MISSILE CONTROL SURFACE MODEL WITH 29 JOINTS
AUGUST 1968
   29     2    45     0     9     1    29
    1
30.        0.3        0.         0.
    1      2.0        7.87
    2      2.0        10.3
    3      2.0        12.73
    4      2.0        15.16
    5      2.0        17.6
    6      6.15       7.87
    7      6.15       10.3
    8      6.15       12.73
    9      6.15       15.16
   10      6.15       17.6
   11      6.9        6.87
   12      6.9        7.87
   13      6.9        10.3
   14      7.65       7.87
   15      7.65       10.3
   16      7.65       12.73
   17      7.65       15.16
   18      7.65       17.6
   19      11.78      7.87
   20      11.78      10.3
   21      11.78      12.73
   22      11.78      15.16
   23      11.78      17.6
   24      15.9       7.87
   25      15.9       10.3
   26      15.9       12.73
   27      15.9       15.16
   28      15.9       17.6
   29      16.9       6.87
   11     0     0     1
   29     1     1     1
    1      0.05
    2      0.11
    3      0.115
    4      0.125
    5      0.196
    6      0.155
    7      0.305
    8      0.305
    9      0.305
   10      0.165
   11      0.06
   12      0.165
   13      0.005
   14      0.183
   15      0.325
   16      0.31
   17      0.28
```

18	0.14				
19	0.062				
20	0.078				
21	0.078				
22	0.078				
23	0.08				
24	0.033				
25	0.051				
26	0.051				
27	0.051				
28	0.042				
29	0.050				
0.	0.0009	0.0055	1	1	2
0.	0.0009	0.0055	1	2	3
0.	0.0009	0.0055	1	3	4
0.	0.0018	0.0055	1	4	5
0.	0.0164	0.03	1	6	7
0.	0.0164	0.13	1	7	8
0.	0.0164	0.13	1	8	9
0.	0.0164	0.03	1	9	10
0.	0.016	0.03	1	12	13
0.	0.0147	0.028	1	14	15
0.	0.0147	0.028	1	15	16
0.	0.0147	0.028	1	16	17
0.	0.0147	0.028	1	17	18
0.	0.0053	0.091	1	19	20
0.	0.0053	0.091	1	20	21
0.	0.0053	0.091	1	21	22
0.	0.0053	0.091	1	22	23
0.	0.0031	0.006	1	24	25
0.	0.0031	0.006	1	25	26
0.	0.0031	0.006	1	26	27
0.	0.0031	0.006	1	27	28
0.	0.0013	0.0026	1	1	6
0.	0.0027	0.0054	1	2	7
0.	0.0027	0.0054	1	3	8
0.	0.0027	0.0054	1	4	9
0.	0.0026	0.0029	1	5	10
0.	0.0503	0.1	1	6	12
0.	0.0503	0.1	1	12	14
0.	0.0255	0.051	1	7	13
0.	0.0255	0.051	1	13	15
0.	0.038	0.075	1	8	16
0.	0.038	0.075	1	9	17
0.	0.0377	0.075	1	10	18
0.	0.0017	0.0034	1	14	19
0.	0.0035	0.007	1	15	20
0.	0.0035	0.007	1	16	21
0.	0.0035	0.007	1	17	22
0.	0.0017	0.0029	1	18	23
0.	100.	0.01	1	11	12
0.	0.32	0.079	1	11	29

```
0.      0.0017      0.003       1    19    24
0.      0.0017      0.003       1    20    25
0.      0.0035      0.007       1    21    26
0.      0.0035      0.007       1    22    27
0.      0.0017      0.0029      1    23    28
```

Program Output

MISSILE CONTROL SURFACE MODEL WITH 29 JOINTS
AUGUST 1968

NJTS = 29 NR = 2 NAL = 45 NPE = 8 NMODE = 9 NKEY = 1 NLUMP = 29

MATERIAL PROPERTIES

NO.	YOUNG'S MODULUS	POISSON RATIO	MODULUS OF RIGIDITY	DENSITY
1	0.30000E 08	0.30000	0.11538E 08	0.

JOINT COORDINATES

JOINT NO.	X COORD.	Y COORD.
1	2.00000	7.87500
2	2.00000	10.37500
3	2.00000	12.75000
4	2.00000	15.12500
5	2.00000	17.62500
6	6.15000	7.87500
7	6.15000	10.37500
8	6.15000	12.75000
9	6.15000	15.12500
10	6.15000	17.62500
11	6.90000	6.87500
12	6.90000	7.87500
13	6.90000	10.37500
14	7.65000	7.87500
15	7.65000	10.37500
16	7.65000	12.75000
17	7.65000	15.12500
18	7.65000	17.62500
19	11.78000	7.87500
20	11.78000	10.37500
21	11.78000	12.75000
22	11.78000	15.12500
23	11.78000	17.62500
24	15.90000	7.87500
25	15.90000	10.37500
26	15.90000	12.75000
27	15.90000	15.12500
28	15.90000	17.62500
29	16.90000	6.87500

JOINT RESTRAINT CODE

JOINT NO.	Z DISPLACEMENT	ROTATION ABOUT X	ROTATION ABOUT Y
11	0	0	1
29	1	1	1

COORDINATE NUMBERS FOR EACH Z DISPLACEMENT AT EACH UNRESTRAINED JOINT

JOINT NO.	COORD. NO.
1	1
2	2
3	3
4	

NOT REPRODUCIBLE

5	5
6	6
7	7
8	8
9	9
10	10
11	11
12	12
13	13
14	14
15	15
16	16
17	17
18	18
19	19
20	20
21	21
22	22
23	23
24	24
25	25
26	26
27	27
28	28

LUMPED WEIGHTS

JOINT NO.	WEIGHT
1	0.0500
2	0.1100
3	0.1150
4	0.1250
5	0.1960
6	0.1550
7	0.3850
8	0.3850
9	0.3850
10	0.1650
11	0.8600
12	0.1650
13	0.0850
14	0.1830
15	0.3750
16	0.3100
17	0.2000
18	0.1400
19	0.0620
20	0.4700
21	0.0700
22	0.0700
23	0.0500
24	0.0350
25	0.0510
26	0.0510
27	0.0510
28	0.0420
29	0.0500

BEAM ELEMENT PROPERTIES ••••••••••••••••••••••••••••

ELEMENT NO.	A	I	J	MAT	JOINT 1	JOINT 2
1	0.	0.0000	0.0055	1	1	2
2	0.	0.0000	0.0055	1	2	3
3	0.	0.0000	0.0055	1	3	4

NOT REPRODUCIBLE

4	0.	0.0018	0.0035	1	4	5
5	0.	0.0164	0.0300	1	6	7
6	0.	0.0164	0.0300	1	7	8
7	0.	0.0164	0.0300	1	8	9
8	0.	0.0164	0.0300	1	9	10
9	0.	0.0164	0.0300	1	12	13
10	0.	0.0147	0.0288	1	14	15
11	0.	0.0147	0.0288	1	15	16
12	0.	0.0147	0.0288	1	16	17
13	0.	0.0147	0.0288	1	17	18
14	0.	0.0053	0.0018	1	19	20
15	0.	0.0053	0.0018	1	20	21
16	0.	0.0053	0.0018	1	21	22
17	0.	0.0053	0.0018	1	22	23
18	0.	0.0031	0.0068	1	24	25
19	0.	0.0031	0.0068	1	25	26
20	0.	0.0031	0.0068	1	26	27
21	0.	0.0031	0.0068	1	27	28
22	0.	0.0011	0.0026	1	1	6
23	0.	0.0027	0.0054	1	2	7
24	0.	0.0027	0.0054	1	3	8
25	0.	0.0027	0.0054	1	4	9
26	0.	0.0026	0.0029	1	5	10
27	0.	0.0053	0.1000	1	6	12
28	0.	0.0053	0.1000	1	12	14
29	0.	0.0255	0.0510	1	7	13
30	0.	0.0255	0.0510	1	13	15
31	0.	0.0388	0.0750	1	8	16
32	0.	0.0388	0.0750	1	9	17
33	0.	0.0377	0.0759	1	10	18
34	0.	0.0017	0.0034	1	14	19
35	0.	0.0035	0.0070	1	15	20
36	0.	0.0035	0.0070	1	16	21
37	0.	0.0035	0.0070	1	17	22
38	0.	0.0017	0.0029	1	18	23
39	0.	100.0000	0.0100	1	11	12
40	0.	0.3288	0.0798	1	11	29
41	0.	0.0017	0.0030	1	19	24
42	0.	0.0017	0.0030	1	20	25
43	0.	0.0035	0.0070	1	21	26
44	0.	0.0035	0.0070	1	22	27
45	0.	0.0017	0.0029	1	23	28

NOT REPRODUCIBLE
FURNISHED TO DTIC

REDUCED UPPER TRIANGULAR STIFFNESS MATRIX

ROW 1

0.86379E 04	-0.10372E 05	0.43383E 04	-0.11434E 04	0.18516E 03	-0.19469E 05	0.49571E 04	0.10394E 04	-0.10382E 03
0.74871E 02	-0.16368E 04	0.19325E 05	-0.38610E 04	-0.38348E 04	0.64852E 03	-0.25693E 03	-0.12255E 03	-0.21745E 01
0.28821E 01	-0.61275E 00	0.38583E 01	-0.24938E 00	0.37847E 00	-0.53375E 00	0.31688E 00	-0.47188E 00	-0.13917E 00
0.13291E-01							

ROW 2

0.20222E 05	-0.21823E 05	0.69385E 04	-0.14128E 04	0.41947E 04	-0.36024E 05	0.28599E 04	0.13471E 04	-0.29345E 02
0.27636E 04	-0.53489E 04	0.34812E 05	0.42998E 03	-0.60817E 04	-0.62565E 03	-0.15365E 03	-0.11234E 03	0.32691E 00
0.13398E 02	0.18761E 02	0.43548E 01	-0.16751E 00	0.28311E 00	-0.27459E 01	-0.11971E 01	-0.38642E 00	-0.50225E-01

ROW 3

0.38819E 05	-0.23913E 05	0.58994E 04	0.17271E 04	0.31581E 04	-0.28526E 05	0.38681E 04	0.87589E 03	-0.16158E 04
0.12282E 04	-0.15187E 04	0.23399E 03	-0.28985E 03	0.11340E 05	-0.49387E 03	-0.39956E 03	0.13187E 01	0.41386E 00
-0.11298E 03	0.84389E 01	0.11313E 01	-0.54835E 00	-0.30371E 00	0.19166E 02	-0.10747E 01	-0.68894E 00	

ROW 4

0.35038E 05	-0.13598E 05	-0.15172E 03	0.20809E 04	0.26682E 04	-0.21412E 05	0.46815E 04	0.64310E 03	-0.18458E 04
-0.1 E 0	0.6 02	.44 03	6836 3	0660	-(372E	-0 21E	0. E 0	0.7 01

5	5
6	6
7	7
8	8
9	9
10	10
11	11
12	12
13	13
14	14
15	15
16	16
17	17
18	18
19	19
20	20
21	21
22	22
23	23
24	24
25	25
26	26
27	27
28	28

LUMPED WEIGHTS

JOINT NO.	WEIGHT
1	0.0500
2	0.1100
3	0.1150
4	0.1250
5	0.1900
6	0.1550
7	0.3850
8	0.3850
9	0.3850
10	0.1650
11	0.0400
12	0.1650
13	0.4850
14	0.1850
15	0.3750
16	0.3100
17	0.2800
18	0.1400
19	0.0625
20	0.4700
21	0.0700
22	0.0700
23	0.0800
24	0.4330
25	0.0510
26	0.0510
27	0.0510
28	0.0420
29	0.0500

BEAM ELEMENT PROPERTIES **********

ELEMENT NO.	A	I	J	MAT	JOINT 1	JOINT 2
1	0.	0.0009	0.0055	1	1	2
2	0.	0.0009	0.0055	1	2	3
3	0.	0.0009	0.0055	1	3	4

NOT REPRODUCIBLE

4	0.	0.0618	0.0854	1	4	5
5	0.	0.0164	0.0388	1	6	7
6	0.	0.0164	0.0388	1	7	8
7	0.	0.0164	0.0388	1	8	9
8	0.	0.0164	0.0388	1	9	10
9	0.	0.0169	0.0388	1	12	13
10	0.	0.0147	0.0288	1	14	15
11	0.	0.0147	0.0285	1	15	16
12	0.	0.0147	0.0288	1	16	17
13	0.	0.0147	0.0288	1	17	18
14	0.	0.0053	0.0018	1	19	20
15	0.	0.0053	0.0018	1	20	21
16	0.	0.0053	0.0018	1	21	22
17	0.	0.0053	0.0018	1	22	23
18	0.	0.0031	0.0068	1	24	25
19	0.	0.0031	0.0068	1	25	26
20	0.	0.0031	0.0068	1	26	27
21	0.	0.0031	0.0068	1	27	28
22	0.	0.0014	0.0026	1	1	6
23	0.	0.0027	0.0054	1	2	7
24	0.	0.0027	0.0054	1	3	8
25	0.	0.0027	0.0054	1	4	9
26	0.	0.0026	0.0029	1	5	10
27	0.	0.0583	0.1088	1	8	12
28	0.	0.0583	0.1088	1	12	14
29	0.	0.0255	0.0518	1	7	13
30	0.	0.0255	0.0518	1	13	15
31	0.	0.0388	0.0758	1	8	16
32	0.	0.0388	0.0758	1	9	17
33	0.	0.0377	0.0758	1	18	18
34	0.	0.0017	0.0034	1	14	19
35	0.	0.0035	0.0070	1	15	20
36	0.	0.0035	0.0070	1	16	21
37	0.	0.0035	0.0070	1	17	22
38	0.	0.0017	0.0029	1	18	23
39	0.	100.0000	0.0100	1	11	12
40	0.	0.3208	0.0798	1	11	29
41	0.	0.0017	0.0038	1	19	24
42	0.	0.0017	0.0038	1	20	25
43	0.	0.0035	0.0070	1	21	26
44	0.	0.0035	0.0070	1	22	27
45	0.	0.0017	0.0029	1	23	28

REDUCED UPPER TRIANGULAR STIFFNESS MATRIX

ROW 1

0.86379E 04	-0.10372E 05	0.43383E 04	-0.11434E 04	0.18516E 03	-0.19469E 05	0.49571E 04	0.10394E 04	-0.10382E 03
0.74871E 02	-0.16368E 04	0.19325E 05	-0.30610E 04	-0.38340E 04	0.64852E 03	-0.25693E 03	-0.12259E 03	-0.21745E 01
0.20821E 01	-0.61275E 00	0.38583E 01	-0.24938E 00	0.37647E 00	-0.53375E 00	0.31698E 00	-0.47188E 00	-0.13917E 00
0.13291E-01								

ROW 2

0.20222E 05	-0.21823E 05	0.69385E 04	-0.14128E 04	0.41947E 04	-0.36024E 05	0.28599E 04	0.13471E 04	-0.29345E 02
0.27636E 04	-0.53489E 04	0.34812E 05	0.42998E 03	-0.68817E 04	-0.62565E 03	-0.15365E 03	-0.11234E 03	0.32691E 00
0.13398E 02	0.18761E 02	0.43548E 01	-0.36751E 00	0.28311E 00	-0.27459E 01	-0.11971E 01	-0.38642E 00	-0.50225E-01

ROW 3

0.38819E 05	-0.23913E 05	0.58994E 04	0.17271E 04	0.31501E 04	-0.28526E 05	0.30681E 04	0.87589E 03	-0.16158E 04
0.12282E 04	-0.15187E 04	0.23599E 03	-0.28985E 03	0.11348E 05	-0.49387E 03	-0.39956E 03	0.13187E 01	0.41386E 00
-0.11288E 03	0.84389E 01	0.11313E 01	-0.54835E 00	-0.30371E 00	0.19166E 02	-0.18747E 01	-0.68894E 00	

ROW 4

0.35838E 05	-0.13598E 05	-0.15172E 03	0.28809E 04	0.26682E 04	-0.21412E 05	0.46815E 04	0.64310E 03	-0.19458E 04
0.64	0.6	02	.44	03	6836	03	0666	0372E 0	01E	0.	8E 0	0.7	01

NOT REPRODUCIBLE

[illegible]	[illegible]	[illegible]	[illegible]	[illegible]	[illegible]	[illegible]	[illegible]	[illegible]	[illegible]

ROW 5

0.12121E 05	0.14988E 03	-0.46181E 02	0.12191E 04	0.44553E 04	-0.17727E 05	-0.15410E 03	0.15688E 03	-0.32540E 03	
0.36594E 02	-0.47458E 02	-0.27465E 03	-0.49055E 03	0.98847E 04	0.46764E 00	-0.12745E 01	0.30319E 01	0.11918E 02	
-0.56238E 02	0.31510E-02	-0.51609E-03	-0.95101E 00	-0.13536E 01	0.93892E 01				

ROW 6

0.62897E 07	-0.74782E 06	0.94194E 05	-0.21037E 05	0.29930E 04	-0.23869E 06	-0.11222E 08	0.56081E 06	0.54317E 07	
-0.70638E 05	0.15897E 05	-0.66798E 04	0.14826E 04	-0.53809E 04	0.25777E 01	0.17654E 03	-0.11861E 03	0.38269E 02	
0.97516E 03	-0.56051E 02	-0.41797E 02	-0.17177E 02	-0.73097E 00					

ROW 7

0.43331E 07	-0.50141E 06	0.11141E 06	-0.18158E 05	0.31545E 06	0.26952E 06	-0.67228E 07	-0.70567E 05	0.29776E 07	
0.12239E 06	0.31969E 05	-0.59102E 04	0.30116E 03	-0.96339E 04	-0.13744E 04	0.25888E 03	-0.10385E 03	-0.86918E 02	
0.13199E 04	0.23213E 03	-0.19034E 02	-0.19497E 02						

ROW 8

0.87930E 06	-0.47070E 06	0.76278E 05	-0.10703E 06	0.15349E 06	-0.29888E 05	0.14116E 05	0.18686E 06	-0.36673E 06	
0.13486E 06	0.11986E 05	-0.10048E 03	0.51683E 03	0.19943E 05	0.49331E 03	-0.72374E 02	0.10344E 03	0.12486E 03	
-0.39836E 04	0.17787E 03	0.75160E 02							

ROW 9

0.78190E 06	-0.31807E 06	0.26685E 05	-0.37328E 05	0.13956E 05	-0.70165E 04	0.29579E 05	0.13469E 06	-0.43693E 06	
0.18846E 06	-0.12810E 03	0.10386E 03	0.66825E 03	0.19243E 05	0.56626E 03	0.25777E 02	0.64382E 02	0.18679E 03	
-0.38888E 04	0.19762E 03								

ROW 10

0.32158E 06	-0.44139E 04	0.63475E 04	-0.12238E 04	0.14177E 04	-0.64281E 04	0.12076E 05	0.18821E 06	-0.25718E 06	
0.15372E 02	-0.81726E 02	-0.19164E 03	0.90481E 03	0.98549E 04	0.53886E 01	0.14148E 02	0.69716E 02	0.15874E 03	
-0.20026E 04									

ROW 11

0.17848E 07	-0.19994E 07	0.32983E 06	-0.21365E 06	0.29202E 06	-0.98600E 05	0.24283E 05	-0.39738E 04	-0.23969E 04	
0.41568E 04	-0.24663E 04	0.88465E 03	-0.17830E 03	-0.99718E 02	0.13978E 03	-0.77436E 02	0.50434E 02	-0.13103E 02	

ROW 12

0.25395E 08	-0.16063E 07	-0.11253E 08	0.20220E 06	0.13921E 06	-0.34675E 05	0.56088E 04	0.33892E 05	-0.40568E 04	
0.27639E 04	-0.12568E 04	0.21810E 03	-0.57925E 04	0.21637E 03	0.39544E 03	0.11893E 02	0.32168E 02		

ROW 13

0.13641E 08	0.52855E 06	-0.67395E 07	-0.58988E 05	0.81036E 04	-0.20028E 04	-0.63038E 03	0.53419E 05	0.24247E 04	
0.19841E 03	-0.13694E 03	0.50299E 03	-0.78512E 04	-0.22190E 03	0.22977E 03	0.57862E 02			

ROW 14

0.62167E 07	-0.68926E 06	0.84837E 05	-0.17532E 05	0.25987E 04	-0.35568E 05	0.13163E 04	0.15083E 04	-0.34254E 03	
0.12107E 03	0.70824E 04	-0.49900E 03	-0.37036E 03	-0.10761E 03	-0.11752E 02				

ROW 15

0.43105E 07	-0.44449E 06	0.99621E 05	-0.14940E 05	0.25498E 04	-0.58738E 05	-0.36121E 03	0.14351E 04	-0.23727E 03	
-0.59909E 03	0.95039E 04	-0.21295E 03	-0.24131E 03	-0.88296E 02					

ROW 16

0.84315E 06	-0.43355E 06	0.67745E 05	0.91798E 03	0.14139E 04	-0.39128E 05	0.18181E 04	0.69393E 03	-0.23474E 03	
-0.28677E 03	0.81971E 04	-0.38017E 03	-0.14834E 03						

ROW 17

0.76125E 06	-0.30137E 06	-0.24697E 03	0.12032E 04	0.17458E 04	-0.39328E 05	0.25519E 04	-0.55016E 02	-0.11082E 03	
-0.39111E 03	0.81168E 04	-0.37639E 03							

ROW 18

0.31213E 06	0.88647E 02	-0.27658E 03	0.78258E 03	0.22157E 04	-0.20817E 05	-0.79818E 01	-0.43558E 02	-0.14365E 03	
-0.33854E 03	0.41343E 04								

ROW 19

0.35668E 05	-0.47934E 05	0.27698E 05	-0.67202E 04	0.10186E 04	-0.72441E 04	0.39668E 04	0.25735E 03	-0.87764E 02	

0.76738E 02

ROW 20
0.13911E 06 -0.11883E 06 0.48182E 05 -0.64638E 04 0.39588E 04 -0.12142E 05 0.28725E 04 0.13797E 04 -0.28831E 03

ROW 21
0.18527E 06 -0.11881E 06 0.26942E 05 0.26947E 03 0.28675E 04 -0.13399E 05 0.31878E 04 0.88975E 03

ROW 22
0.14375E 06 -0.47169E 05 -0.95025E 02 0.13618E 04 0.31995E 04 -0.14788E 05 0.39842E 04

ROW 23
0.35523E 05 0.78831E 02 -0.29181E 03 0.88768E 03 0.39857E 04 -0.76779E 04

ROW 24
0.15548E 05 -0.27452E 05 0.16544E 05 -0.48397E 04 0.61458E 03

ROW 25
0.73158E 05 -0.63827E 05 0.23654E 05 -0.38218E 04

ROW 26
0.97933E 05 -0.63957E 05 0.15838E 05

ROW 27
0.74114E 05 -0.27225E 05

ROW 28
0.15845E 05

REDUCED UPPER TRIANGULAR FLEXIBILITY MATRIX

ROW 1
0.46916E-03 0.38422E-03 0.35173E-03 0.35257E-03 0.36603E-03 0.51584E-04 0.79629E-04 0.10505E-03 0.12839E-03
0.15181E-03 0.87414E-05 0.19157E-04 0.44482E-04 -0.12834E-04 0.96582E-05 0.32235E-04 0.54675E-04 0.77682E-04
-0.28877E-03 -0.18272E-03 -0.16479E-03 -0.14581E-03 -0.12589E-03 -0.39581E-03 -0.37738E-03 -0.35954E-03 -0.34192E-03
-0.32311E-03

ROW 2
0.49723E-03 0.55666E-03 0.62817E-03 0.69754E-03 0.76772E-04 0.17213E-03 0.26864E-03 0.36271E-03 0.45575E-03
0.88343E-05 0.44482E-04 0.13517E-03 0.12415E-04 0.98816E-04 0.18953E-03 0.28169E-03 0.37415E-03 0.18782E-03
-0.18376E-03 -0.28785E-04 0.64638E-04 0.15182E-03 -0.39384E-03 -0.31146E-03 -0.22954E-03 -0.14684E-03 -0.63013E-04

ROW 3
0.76888E-03 0.92198E-03 0.18782E-02 0.10282E-03 0.26489E-03 0.43883E-03 0.61332E-03 0.78656E-03 0.89273E-05
0.69888E-04 0.22715E-03 0.37689E-04 0.18986E-03 0.35367E-03 0.52361E-03 0.69536E-03 -0.15977E-03 -0.21599E-04
0.13833E-03 0.28742E-03 0.44821E-03 -0.39228E-03 -0.24259E-03 -0.92022E-04 0.68194E-04 0.21456E-03

ROW 4
0.12342E-02 0.14961E-02 0.12738E-03 0.35738E-03 0.61186E-03 0.87635E-03 0.11439E-02 0.98289E-05 0.95134E-04
0.31941E-03 0.62982E-04 0.28185E-03 0.52383E-03 0.77932E-03 0.10425E-02 -0.15379E-03 0.65915E-04 0.29248E-03
0.52825E-03 0.77869E-03 -0.38821E-03 -0.16456E-03 0.64825E-04 0.28915E-03 0.52897E-03

ROW 5
0.19592E-02 0.15278E-03 0.44992E-03 0.78356E-03 0.11438E-02 0.15147E-02 0.91148E-05 0.12057E-03 0.41284E-03
0.88189E-04 0.37445E-03 0.69459E-03 0.10418E-02 0.14041E-02 -0.13716E-03 0.15715E-03 0.46217E-03 0.78158E-03
0.11111E-02 -0.38887E-03 -0.78947E-04 0.22577E-03 0.53499E-03 0.84932E-03

ROW 6
0.24126E-04 0.49431E-04 0.74743E-04 0.10085E-03 0.12546E-03 0.87419E-05 0.19162E-04 0.44586E-04 0.14287E-04
0.39598E-04 0.64981E-04 0.98289E-04 0.11562E-03 -0.12788E-04 0.12557E-04 0.37834E-04 0.63122E-04 0.80519E-04
-0.30698E-04 -0.14428E-04 0.18844E-04 0.36128E-04 0.61584E-04

ROW 7
0. 1E- 0.2 E-0 1.32 -03 417 03 1834 5 487 6 17E 0.- 4E- 0.1 E-0 1

0.22[illegible]E-03	0.31[illegible]E-03	0.40[illegible]E-03	0.[illegible]E-03	0.[illegible]E-03	0.[illegible]E-03	0.[illegible]E-03	0.[illegible]E-03	0.[illegible]E-03	0.22[illegible]E-04
0.68734E-04	0.15960E-03	0.25069E-03	0.34232E-03						
ROW 8									
0.48335E-03	0.57455E-03	0.74614E-03	0.89279E-03	0.69813E-04	0.22741E-03	0.64986E-04	0.22178E-03	0.38981E-03	
0.56088E-03	0.73233E-03	0.29718E-04	0.19133E-03	0.35688E-03	0.52345E-03	0.69264E-03	-0.64468E-05	0.15768E-03	
0.32229E-03	0.48791E-03	0.65495E-03							
ROW 9									
0.83727E-03	0.11019E-02	0.98211E-05	0.95140E-04	0.31961E-03	0.98216E-04	0.31488E-03	0.56118E-03	0.82169E-03	
0.10886E-02	0.48296E-04	0.28544E-03	0.52955E-03	0.78184E-03	0.10371E-02	0.71037E-05	0.25078E-03	0.48594E-03	
0.74349E-03	0.99386E-03								
ROW 10									
0.14727E-02	0.91147E-05	0.12057E-03	0.41217E-03	0.11563E-03	0.48668E-03	0.73384E-03	0.10864E-02	0.14546E-02	
0.65752E-04	0.38826E-03	0.78648E-03	0.18464E-02	0.13954E-02	0.19297E-04	0.34577E-03	0.67529E-03	0.10898E-02	
0.13473E-02									
ROW 11									
0.87838E-05	0.87428E-05	0.88349E-05	0.87421E-05	0.88358E-05	0.89281E-05	0.90214E-05	0.91156E-05	0.87428E-05	
0.88359E-05	0.89298E-05	0.90272E-05	0.91158E-05	0.87436E-05	0.88378E-05	0.89302E-05	0.90235E-05	0.91169E-05	
ROW 12									
0.19163E-04	0.44488E-04	0.19164E-04	0.44489E-04	0.69815E-04	0.95143E-04	0.12857E-03	0.19178E-04	0.44487E-04	
0.69823E-04	0.95151E-04	0.12858E-03	0.19179E-04	0.44586E-04	0.69833E-04	0.95160E-04	0.12859E-03		
ROW 13									
0.13523E-03	0.44512E-04	0.13521E-03	0.22746E-03	0.31964E-03	0.43228E-03	0.44221E-04	0.13564E-03	0.22758E-03	
0.31957E-03	0.41208E-03	0.44873E-04	0.13578E-03	0.22759E-03	0.31951E-03	0.41188E-03			
ROW 14									
0.24129E-04	0.49438E-04	0.74754E-04	0.18686E-03	0.12548E-03	0.51439E-04	0.76669E-04	0.18192E-03	0.12728E-03	
0.15259E-03	0.78564E-04	0.18381E-03	0.12985E-03	0.15431E-03	0.17967E-03				
ROW 15									
0.14188E-03	0.23339E-03	0.32567E-03	0.41834E-03	0.79746E-04	0.17235E-03	0.26902E-03	0.35755E-03	0.45848E-03	
0.11118E-03	0.20377E-03	0.29642E-03	0.38988E-03	0.48289E-03					
ROW 16									
0.48373E-03	0.57586E-03	0.74692E-03	0.18336E-03	0.27858E-03	0.44825E-03	0.61135E-03	0.78334E-03	0.13662E-03	
0.38616E-03	0.47615E-03	0.64674E-03	0.81837E-03						
ROW 17									
0.83778E-03	0.11024E-02	0.12238E-03	0.36676E-03	0.61841E-03	0.87679E-03	0.11386E-02	0.15324E-03	0.48542E-03	
0.65928E-03	0.91499E-03	0.11734E-02							
ROW 18									
0.14728E-02	0.13944E-03	0.46197E-03	0.79665E-03	0.11453E-02	0.15824E-02	0.18548E-03	0.58229E-03	0.84215E-03	
0.11861E-02	0.15346E-02								
ROW 19									
0.39317E-03	0.36295E-03	0.34828E-03	0.34451E-03	0.34468E-03	0.72276E-03	0.67183E-03	0.62916E-03	0.59953E-03	
0.57828E-03									
ROW 20									
0.45827E-03	0.54187E-03	0.62218E-03	0.78539E-03	0.68348E-03	0.76122E-03	0.83479E-03	0.90668E-03	0.97993E-03	
ROW 21									
0.73315E-03	0.81946E-03	0.10448E-02	0.65399E-03	0.84936E-03	0.10401E-02	0.12223E-02	0.14088E-02		
ROW 22									
0.12044E-02	0.14887E-02	0.62835E-03	0.93893E-03	0.12361E-02	0.15482E-02	0.18414E-02			
ROW 23									
0.19176E-02	0.60348E-03	0.10885E-02	0.14246E-02	0.18549E-02	0.22972E-02				

0.16762E-02 0.14871E-02 0.13328E-02 0.12236E-02 0.11398E-02

ROW 25
0.15418E-02 0.15678E-02 0.15941E-02 0.16311E-02

ROW 26
0.17884E-02 0.19734E-02 0.21473E-02

ROW 27
0.23496E-02 0.27082E-02

ROW 28
0.32988E-02

REDUCED UPPER TRIANGULAR WEIGHT MATRIX

ROW 1
0.50000E-01 0. 0. 0. 0. 0. 0. 0. 0.
0. 0. 0. 0. 0. 0. 0. 0. 0.
0. 0. 0. 0. 0. 0. 0. 0. 0.
0.

ROW 2
0.11000E 00 0. 0. 0. 0. 0. 0. 0. 0.
0. 0. 0. 0. 0. 0. 0. 0. 0.
0. 0. 0. 0. 0. 0. 0. 0. 0.

ROW 3
0.11500E 00 0. 0. 0. 0. 0. 0. 0. 0.
0. 0. 0. 0. 0. 0. 0. 0. 0.
0. 0. 0. 0. 0. 0. 0. 0.

ROW 4
0.12500E 00 0. 0. 0. 0. 0. 0. 0. 0.
0. 0. 0. 0. 0. 0. 0. 0. 0.
0. 0. 0. 0. 0. 0. 0.

ROW 5
0.13600E 00 0. 0. 0. 0. 0. 0. 0. 0.
0. 0. 0. 0. 0. 0. 0. 0. 0.
0. 0. 0. 0. 0. 0.

ROW 6
0.15500E 00 0. 0. 0. 0. 0. 0. 0. 0.
0. 0. 0. 0. 0. 0. 0. 0. 0.
0. 0. 0. 0. 0.

ROW 7
0.30500E 00 0. 0. 0. 0. 0. 0. 0. 0.
0. 0. 0. 0. 0. 0. 0. 0. 0.
0. 0. 0. 0.

ROW 8
0.30500E 00 0. 0. 0. 0. 0. 0. 0. 0.
0. 0. 0. 0. 0. 0. 0. 0. 0.
0. 0. 0.

ROW 9
0.30500E 00 0. 0. 0. 0. 0. 0. 0. 0.
0. 0. 0. 0. 0. 0. 0. 0. 0.
0. 0.

N 1

```
[redacted]
   0.                0.                0.                0.                0.                0.                0.                0.                0.
   0.
ROW  11
   0.60000E-01       0.                0.                0.                0.                0.                0.                0.                0.
   0.                0.                0.                0.                0.                0.                0.                0.                0.
ROW  12
   0.16500E 00       0.                0.                0.                0.                0.                0.                0.                0.
   0.                0.                0.                0.                0.                0.                0.                0.
ROW  13
   0.50000E-02       0.                0.                0.                0.                0.                0.                0.                0.
   0.                0.                0.                0.                0.                0.                0.
ROW  14
   0.18300E 00       0.                0.                0.                0.                0.                0.                0.                0.
   0.                0.                0.                0.                0.                0.
ROW  15
   0.32500E 00       0.                0.                0.                0.                0.                0.                0.                0.
   0.                0.                0.                0.                0.
ROW  16
   0.31000E 00       0.                0.                0.                0.                0.                0.                0.                0.
   0.                0.                0.                0.
ROW  17
   0.20000E 00       0.                0.                0.                0.                0.                0.                0.                0.
   0.                0.                0.
ROW  18
   0.14000E 00       0.                0.                0.                0.                0.                0.                0.                0.
   0.                0.
ROW  19
   0.62000E-01       0.                0.                0.                0.                0.                0.                0.                0.
   0.
ROW  20
   0.78000E-01       0.                0.                0.                0.                0.                0.                0.                0.
ROW  21
   0.78000E-01       0.                0.                0.                0.                0.                0.                0.
ROW  22
   0.78000E-01       0.                0.                0.                0.                0.                0.
ROW  23
   0.80000E-01       0.                0.                0.                0.                0.
ROW  24
   0.33000E-01       0.                0.                0.                0.
ROW  25
   0.51000E-01       0.                0.                0.
ROW  26
   0.51000E-01       0.                0.
ROW  27
   0.51000E-01       0.
ROW  28
   0.42000E-01
```

HERE ARE THE EIGENVALUES AND EIGENVECTORS

EIGENVECTOR NUMBER 1
CORRESPONDING TO 1.0A312708E 05

7.5671963E-02 2.7382202AE-01 4.0568082E-01 7.1163884E-01 9.4433547E-01 8.8516361E-02
2.7177413E-01 4.8254186E-01 7.8565986E-01 9.3484838E-01 8.2828189E-03 8.1725252E-02
2.7313587E-01 8.2950785E-02 2.7475527E-01 4.8588432E-01 7.9874863E-01 9.3688696E-01
9.1979566E-02 2.9917359E-01 5.1354181E-01 7.3457419E-01 9.2992815E-01 1.1650926E-01
3.3417264E-01 5.5386807E-01 7.7551311E-01 1.0000000E 00

EIGENVECTOR NUMBER 2
CORRESPONDING TO 6.6696182E 05

-3.8744283E-01 -4.2682698E-01 -4.6928468E-01 -5.1075831E-01 -5.4658956E-01 -5.1596338E-02
-6.7392753E-02 -8.5112546E-02 -1.0183895E-01 -1.1718478E-01 7.9285418E-04 -2.1701996E-03
-1.8241534E-02 4.7341119E-02 4.7224479E-02 4.4713861E-02 3.7477812E-02 2.6856935E-02
4.2884392E-01 4.4955113E-01 4.6262268E-01 4.7676811E-01 4.8021618E-01 9.1298325E-01
9.3354812E-01 9.5483493E-01 9.7712854E-01 1.0000000E 00

EIGENVECTOR NUMBER 3
CORRESPONDING TO 6.5344921E 06

2.1482385E-01 2.3893214E-01 2.4763423E-01 2.5916687E-01 2.6307175E-01 2.0508564E-02
1.1244616E-02 -1.4813247E-02 -5.0499187E-02 -1.1411377E-01 1.0869800E-02 1.3914428E-02
1.7048453E-03 1.2386989E-02 -5.7877737E-03 -4.9421682E-02 -1.1264021E-01 -1.0175866E-01
3.6998858E-01 2.8888933E-01 4.1739877E-02 -1.3988647E-01 -3.2922487E-01 1.0000000E 00
6.8485761E-01 3.5929762E-01 4.1588116E-02 -2.6758188E-01

EIGENVECTOR NUMBER 4
CORRESPONDING TO 8.8983814E 06

3.8397695E-01 2.3968161E-01 2.8916583E-01 1.7781751E-01 2.8835634E-01 -2.3162875E-02
-7.7438719E-02 -1.1582484E-01 -1.2441898E-01 -1.1297489E-01 -2.6281853E-02 -4.9975799E-02
-1.8437918E-01 -7.7815826E-02 -1.3854935E-01 -1.5848135E-01 -1.5699868E-01 -1.4115268E-01
-3.5867865E-01 -2.2925449E-01 -8.5386628E-02 8.8913847E-02 2.6259988E-01 -4.8648917E-01
-1.3227519E-01 2.4882178E-01 4.1967439E-01 1.0000000E 00

EIGENVECTOR NUMBER 5
CORRESPONDING TO 1.8631486E 07

1.0000000E 00 8.8944992E-01 5.4817238E-01 -6.2114827E-02 -7.7427939E-01 1.6678768E-01
2.4451836E-01 2.1828617E-01 8.7463875E-02 -1.8221224E-01 8.7103571E-02 1.2935988E-01
2.8862868E-01 9.3785964E-02 1.7518534E-01 1.7888717E-01 5.1938868E-02 -1.3916548E-01
-4.8648681E-02 3.1332147E-02 7.1582585E-02 6.3865669E-02 2.8888588E-02 -1.5464867E-01
-6.4852118E-02 1.5596489E-02 3.6748618E-02 1.2181973E-01

EIGENVECTOR NUMBER 6
CORRESPONDING TO 2.8984734E 07

1.0000000E 00 4.9854758E-01 -1.0868889E-01 -2.9863763E-01 -1.8889371E-01 -1.7544873E-01
-2.8641884E-01 -2.1695288E-01 8.4693585E-02 5.1328877E-01 -1.4727688E-01 -2.8867146E-01
-3.1385151E-01 -2.4181491E-01 -3.3784518E-01 -2.3837482E-01 1.8673868E-01 5.5822784E-01
-7.7284512E-02 -1.7254127E-01 -1.5812361E-01 -5.9128365E-03 2.2326887E-01 6.8771613E-01
3.2598143E-01 -3.8539587E-03 -2.4327581E-01 -4.1887686E-01

EIGENVECTOR NUMBER 7
CORRESPONDING TO 4.8187388E 07

1.0000000E 00 9.8953155E-02 -5.9873557E-01 -4.3878897E-01 3.6955383E-01 1.2152286E-01
9.1618148E-02 4.8183284E-03 -6.7859247E-02 -9.3375532E-02 1.1483741E-01 1.1969492E-01
1.0420867E-01 1.2932884E-01 1.1695415E-01 6.8662993E-02 -1.8989842E-02 -7.8924946E-02
1.1610774E-01 1.2412349E-01 1.0641885E-01 6.3642785E-02 1.1732678E-02 -1.8198871E-01
-1.2391478E-01 -5.4172986E-02 -1.9288248E-02 -5.2181181E-03

EIGENVECTOR NUMBER 8
CORRESPONDING TO .8591 07

```
-3.1443082E-02  1.7393549E-01  3.8784856E-01  2.3722048E-01  5.3674586E-02 -1.8891701E-01
-1.8526941E-01 -2.4240258E-01 -2.4995175E-01 -2.1076206E-01  1.9282267E-02 -8.6933946E-03
-8.2962831E-02  9.4312377E-02  2.5445667E-02 -2.5469333E-02 -1.6654639E-02  3.9483299E-02
 1.0000000E 00  6.2771085E-01  4.3489884E-01  5.7694636E-01  9.9980319E-01 -4.6842169E-02
-5.4657514E-01 -7.7386762E-01 -6.8726696E-01 -1.8786149E-01

EIGENVECTOR NUMBER     9
          CORRESPONDING TO  7.4181581E 07
-4.6607439E-02 -5.8956507E-02 -5.6A749A9E-02 -4.5593A5AE-02 -1.4199973E-02  9.8369517E-02
 9.8839625E-02  6.2682114E-02  4.2767808E-02  4.8728411E-02  7.7757001E-02  7.6825145E-02
 5.9377179E-02  5.5346151E-02  2.5313066E-02 -2.3486778E-02 -3.6919863E-02 -1.2333826E-02
 3.1976502E-01 -2.6428A7AE-01 -5.3348368E-01 -3.2601445E-01  2.2151188E-01  1.0000000E 00
-1.3333133E-01 -6.5750713E-01 -2.1024782E-01  9.8875286E-01
```

HERE ARE THE NATURAL FREQUENCIES

THE NATURAL FREQUENCY NUMBER	1	IS	69.865	CPS
THE NATURAL FREQUENCY NUMBER	2	IS	129.890	CPS
THE NATURAL FREQUENCY NUMBER	3	IS	406.842	CPS
THE NATURAL FREQUENCY NUMBER	4	IS	474.760	CPS
THE NATURAL FREQUENCY NUMBER	5	IS	818.938	CPS
THE NATURAL FREQUENCY NUMBER	6	IS	856.858	CPS
THE NATURAL FREQUENCY NUMBER	7	IS	1007.934	CPS
THE NATURAL FREQUENCY NUMBER	8	IS	1238.934	CPS
THE NATURAL FREQUENCY NUMBER	9	IS	1378.842	CPS

APPENDIX B

Program FLUENC Listing

```
$       FORTRAN DECK
CHAIN         PROGRAM FLUENC-FOR GENERATING STIFFNESS,FLEXIBILITY AND MASS
C             MATRICES FROM PLANE GRID BEAM AND TRIANG. PLATE ELEMENTS
      DIMENSION TITLE(20),YM(10),PR(10),GE(10),DENS(10),X(50),Y(50),
     1NR1(50),NR2(50),NR3(50),N1(50),N2(50),N3(50),NOSC(9),DCS(2),
     1STM(6,6),SMM(6,6),PLTK(9,9),PLTM(9,9),SSTF(11325),SM(11325),
     1RSMASS(150),A(11325),VALU(9),TEMP(50),B(150),C(100),DUM3(150),
     1F(150,3),IDUM4(50),JMASS(50)
      INTEGER OUT
      EQUIVALENCE(SSTF(1),SM(1),A(1)),(STM(1,1),SMM(1,1),PLTK(1,1),
     1PLTM(1,1))
 1000 FORMAT(12A6)
 1001 FORMAT(16I5)
 1002 FORMAT(8E10.3)
 1003 FORMAT(10X,2E10.3)
 1004 FORMAT(3E10.3,3I5)
 1005 FORMAT(E10.3,5I5)
 1006 FORMAT(I5,5X,E10.3)
 5000 FORMAT(1H1,12A6/1X,12A6)
 5001 FORMAT(///6HNJTS =I5,5X,6H  NR =I3,5X,6H NRE =I3,5X,6H NPE =I3,5X,
     17HNMODE =I3,5X,6HMKEY =I3,5X,/HNLUMP =I3)
 5002 FORMAT(///7HM A T E R I A L    P R O P E R T I E S **************
     1**********************//3HNO.    YOUNG'S MODULUS    POISSON RATIO
     1 MODULUS OF RIGIDITY    DENSITY,10(/I2,6X,E12.5,9X,E7.5,10X,E12.5,
     16X,E12.5))
 5003 FORMAT(///34HJ O I N T    C O O R D I N A T E S/35HJOINT NO.      X
     1 COORD.      Y COORD.)
 5004 FORMAT(I5,7X,E10.5,3X,E10.5)
 5005 FORMAT(///6HJ O I N T    R E S T R A I N T    C O D E ***********
     1**************//67HJOINT NO.    Z DISPLACEMENT    ROTATION ABOUT X
     1   ROTATION ABOUT Y)
 5007 FORMAT(I5,I16,I19,I20)
 5008 FORMAT(///75HR F A M    E L E M E N T    P R O P E R T I E S *****
     1**********************//75HELEMENT NO.       A              I
     1    J      MAT   JOINT 1    JOINT 2)
 5009 FORMAT(I6,8X,F9.4,4X,F9.4,4X,F9.4,2X,I2,6X,I2,9X,I2)
 5010 FORMAT(///12HT R I A N G U L A R    P L A T E    E L E M E N T
     1 P R O P E R T I E S **********************************************
     1****//12HELEMENT NO.       T       MAT   JOINT 1   JOINT 2   JOINT
     13        DX             DY             D1             DXY        BETA)
 5011 FORMAT(I6,8 .F8.4,3X,I2,6X,I2,8X,I2,8X,I2,6X,E11.5,3X,E11.5,3X,
     1E11.5,3X,E1  .5,3X,F6.2)
 5020 FORMAT(///69HCOORDINATE NUMBERS FOR EACH Z DISPLACEMENT AT EACH UN
     1RESTRAINED JOINT//5HJOINT NO.      COORD. NO.)
 5021 FORMAT(I5,I16)
 5022 FORMAT(///29HL U M P E D    W E I G H T S/23HJOINT NO.        WEIG
     1HT)
 5023 FORMAT(I5,6 .F10.4)
      IV=0
C     DISC ASSIGNMENTS
      IN=5
      CALL FLGEOF(IN,IV)
      OUT=6
```

```
      MDISC=7
      NDISC=8
      IDISC=9
      JDISC=10
      KDISC=11
C     BEGIN INPUT OF DATA
  100 READ(IN,1000) (TITLE(I),I=1,24)
      IF(IV.NE.0) CALL EXIT
      REWIND MDISC
      REWIND NDISC
      REWIND IDISC
      REWIND JDISC
      REWIND KDISC
      WRITE(OUT,2000) (TITLE(I),I=1,24)
      READ(IN,1001) NJTS,NR,NBE,NPE,NMODE,MKEY,NLUMP
C     NJTS=NO. OF JOINTS, NR=NO. OF JOINTS WITH RESTRAINTS
C     NBE=NO. OF BEAM ELEMENTS, NPE=NO. OF TRIANGULAR PLATE ELEMENTS
C     NMODE=NO. OF EIGENVALUES AND EIGENVECTORS DESIRED
C     MKEY = 1 DO NOT COMPUTE ELEMENTAL CONSISTENT MASS TERMS
C     MKEY = 2 COMPUTE ELEMENTAL CONSISTENT MASS TERMS
C     NLUMP = NO. OF LUMPED MASSES INPUT
      WRITE(OUT,2001) NJTS,NR,NBE,NPE,NMODE,MKEY,NLUMP
C     INPUT MATERIAL PROPERTIES
      READ(IN,1001) NMAT
      DO 10 I=1,NMAT
      READ(IN,1002) YM(I),PR(I),GE(I),DENS(I)
C     YM=YOUNG'S MOD./10**6, PR=POISSON RATIO, GE=MOD. OF RIGIDITY
C     DENS=DENSITY
      IF(GE(I).EQ.0.) GE(I)=YM(I)/(2.*(1.+PR(I)))
      YM(I)=YM(I)*1.E6
   10 GE(I)=GE(I)*1.E6
      WRITE(OUT,2002) (I,YM(I),PR(I),GE(I),DENS(I),I=1,NMAT)
      DO 256 I=1,NMAT
  256 DENS(I)=DENS(I)/(32.1/4*12.)
C     INPUT JOINT COORDINATES
      READ(IN,1003) (X(M),Y(M),M=1,NJTS)
      WRITE(OUT,2003)
      WRITE(OUT,2004) (M,X(M),Y(M),M=1,NJTS)
C     INPUT JOINT RESTRAINT CODE
C     0=FREE
C     1=CLAMPED
      DO 12 I=1,NJTS
      NR1(I)=0
      NR2(I)=0
      NR3(I)=0
      N1(I)=0
      N2(I)=0
   12 N3(I)=0
      IF(NR.EQ.0) GO TO 80
      WRITE(OUT,2006)
      DO 11 I=1,NR
      READ(IN,1001) JT,M1,M2,M3
```

```
      NR1(JT)=M1
      NR2(JT)=M2
      NR3(JT)=M3
      WRITE(OUT,9007) JT,M1,M2,M3
   11 CONTINUE
   80 CONTINUE
C     GENERATE COORDINATE NUMBERS FOR EACH DEGREE OF FREEDOM, 0 IF
C     CLAMPED, NORMAL DISPLACEMENTS ARE NUMBERED FIRST
C     N1, N2, N3 CONTAIN COORD. NUMBERS FOR EACH JOINT
C     NREDU = NO. OF NORMAL DISPLACEMENTS
C     NDF = NO. OF DEGREES OF FREEDOM INCLUDING ROTATIONS
      CALL COORDN(NR1,NR2,NR3,N1,N2,N3,NJTS,NREDU,NDF)
      WRITE(OUT,9020)
      DO 50 I=1,NJTS
      IF(NR1(I).EQ.1) GO TO 50
      WRITE(OUT,9021) I,N1(I)
   50 CONTINUE
C     INPUT LUMPED MASSES
      IF(NLUMP.EQ.0) GO TO 250
      READ(IN,1006) ((JMASS(I),RSMASS(I)),I=1,NLUMP)
      WRITE(OUT,9022)
      DO 251 I=1,NLUMP
      WRITE(OUT,9023) JMASS(I),RSMASS(I)
      RSMASS(I)=RSMASS(I)/(32.174*12.)
  251 CONTINUE
  250 CONTINUE
      NSSTF=NDF*(NDF+1)/2
      DO 13 I=1,NSSTF
   13 SSTF(I)=0.
      IF(NBE.EQ.0) GO TO 200
C     BEGIN TO GENERATE BEAM STIFFNESS TERMS
      WRITE(OUT,9008)
      DO 14 NM=1,NBE
C     INPUT BEAM ELEMENT PROPERTIES
      READ(IN,1004) AR,XI,YJ,MAT,JTNR,JTFR
C     AR=AREA OF BEAM CROSS SECTION, XI=AREA MOMENT OF INERTIA,
C     YJ=EFFECTIVE TORSIONAL MOMENT OF INERTIA, MAT=MATERIAL CODE
C     JTNR,JTFR=JOINT NUMBERS AT ENDS
      WRITE(OUT,9009) NM,AR,XI,YJ,MAT,JTNR,JTFR
C     SET UP CODE NUMBERS
      NOSC(1)=N1(JTNR)
      NOSC(2)=N2(JTNR)
      NOSC(3)=N3(JTNR)
      NOSC(4)=N1(JTFR)
      NOSC(5)=N2(JTFR)
      NOSC(6)=N3(JTFR)
      IF(MKEY.EQ.1) GO TO 253
C     STORE INFO. FOR LATER USE
      WRITE(IDISC) AR,XI,YJ,MAT,JTNR,JTFR,(NOSC(I),I=1,6)
  253 CONTINUE
      X1=X(JTNR)
      X2=X(JTFR)
      Y1=Y(JTNR)
```

```
      Y2=Y(JTFR)
      FLNTH=SQRT((X2-X1)**2+(Y2-Y1)**2)
      CALL TRANS(X1,X2,Y1,Y2,FLNTH,DCS)
      E=YM(MAT)
      G=GE(MAT)
      CALL BEAMK(FLNTH,E,G,XI,YJ,STM,DCS)
      DO 15 K=1,6
      IF(NOSC(K).EQ.0) GO TO 15
      I=NOSC(K)
      DO 16 N=1,6
      IF(NOSC(N).EQ.0) GO TO 16
      J=NOSC(N)
      IF(J.LT.I) GO TO 16
      MM=(2*J+(I-1)*(2*NDF-I))/2
      SSTF(MM)=SSTF(MM)+STM(K,N)
   16 CONTINUE
   15 CONTINUE
   14 CONTINUE
  200 CONTINUE
      IF(NPE.EQ.0) GO TO 300
C     BEGIN TO GENERATE TRIANGULAR PLATE STIFFNESS TERMS
      WRITE(OUT,2010)
      DO 17 NM=1,NPE
C     INPUT TRIANGULAR PLATE ELEMENT PROPERTIES
      READ(IN,1005) PTH,MAT,JT1,JT2,JT3,NDX
C     PTH=PLATE THICKNESS, MAT=MATERIAL CODE,
C     JT1,JT2,JT3=JOINT NUMBERS AT CORNERS, ANGLE AT JT1 MUST NOT BE
C     90 DEGREES
C     DX,DY,D1,DXY,BETA - FLEXURAL RIGIDITY TERMS AND ANGLE OF MATERIAL
C     PRINCIPAL AXES W/R TRIANGLE LOCAL AXES
      IF(NDX.EQ.1) READ(IN,1002) DX,DY,D1,DXY,BETA
      IF(NDX.EQ.1) GO TO 18
      BETA=0.
      DX=(YM(MAT)*PTH**3)/(12.*(1.-PR(MAT)**2))
      DY=DX
      D1=PR(MAT)*DX
      DXY=((1.-PR(MAT))/2.)*DX
   18 BETA=BETA/57.2958
      WRITE(OUT,2011) NM,PTH,MAT,JT1,JT2,JT3,DX,DY,D1,DXY,BETA
C     SET UP CODE NUMBERS
      NOSC(1)=N1(JT1)
      NOSC(2)=N2(JT1)
      NOSC(3)=N3(JT1)
      NOSC(4)=N1(JT2)
      NOSC(5)=N2(JT2)
      NOSC(6)=N3(JT2)
      NOSC(7)=N1(JT3)
      NOSC(8)=N2(JT3)
      NOSC(9)=N3(JT3)
      IF(MKEY.EQ.1) GO TO 204
C     STORE INFO. FOR LATER USE
      WRITE(IDISC) PTH,MAT,JT1,JT2,JT3,(NOSC(I),I=1,9)
```

```
 224 CONTINUE
     BX1=X(JT1)
     BX2=X(JT2)
     BY1=Y(JT1)
     BY2=Y(JT2)
     Y2=SQRT((BX2-BX1)**2+(BY2-BY1)**2)
     CALL TRANS(BX1,BX2,BY1,BY2,Y2,DCS)
     X3=DCS(2)*(X(JT3)-BX1)-DCS(1)*(Y(JT3)-BY1)
     Y3=DCS(1)*(X(JT3)-BX1)+DCS(2)*(Y(JT3)-BY1)
     CALL PLATEK(Y2,X3,Y3,DX,DY,DI,DXY,BETA,DCS,PLTK)
     DO 19 K=1,3
     IF(NOSC(K).EQ.0) GO TO 19
     I=NOSC(K)
     DO 20 N=1,3
     IF(NOSC(N).EQ.0) GO TO 20
     J=NOSC(N)
     IF(J.LT.I) GO TO 20
     MM=(2*J+(I-1)*(2*NDF-I))/2
     SSTF(MM)=SSTF(MM)+PLTK(K,N)
  20 CONTINUE
  19 CONTINUE
  17 CONTINUE
 300 CONTINUE
C    STORE FOR REDUCTION
     DO 21 I=1,NDF
     NS=(2*I+(I-1)*(2*NDF-I))/2
     NE=(2*NDF+(I-1)*(2*NDF-I))/2
  21 WRITE(NDISC) (SSTF(J),J=NS,NE)
     REWIND IDISC
     DO 22 I=1,NSSTF
  22 SM(I)=0.
     IF(MKEY.EQ.1) GO TO 225
     IF(NBE.EQ.0) GO TO 201
C    GENERATE BEAM MASS MATRICES
     DO 23 NM=1,NBE
     READ(IDISC) AR,XI,YJ,MAT,JTNR,JTFR,(NOSC(I),I=1,6)
     X1=X(JTNR)
     X2=X(JTFR)
     Y1=Y(JTNR)
     Y2=Y(JTFR)
     FLNTH=SQRT((X2-X1)**2+(Y2-Y1)**2)
     CALL TRANS(X1,X2,Y1,Y2,FLNTH,DCS)
     RHO=DENS(MAT)
     CALL BEAMM(FLNTH,RHO,AR,XI,YJ,SMM,DCS)
     DO 24 K=1,2
     IF(NOSC(K).EQ.0) GO TO 24
     I=NOSC(K)
     DO 25 N=1,3
     IF(NOSC(N).EQ.0) GO TO 25
     J=NOSC(N)
     IF(J.LT.I) GO TO 25
     MM=(2*J+(I-1)*(2*NDF-I))/2
     SM(MM)=SM(MM)+SMM(K,N)
```

```
   25 CONTINUE
   24 CONTINUE
   23 CONTINUE
  201 CONTINUE
      IF(NPE.EQ.0) GO TO 301
C     GENERATE TRIANGULAR PLATE MASS MATRICES
      DO 26 NM=1,NPE
      READ(IDISC) PTH,MAT,JT1,JT2,JT3,(NOSC(I),I=1,9)
      BX1=X(JT1)
      BX2=X(JT2)
      BY1=Y(JT1)
      BY2=Y(JT2)
      Y2=SQRT((BX2-BX1)**2+(BY2-BY1)**2)
      CALL TRANS(BX1,BX2,BY1,BY2,Y2,DCS)
      X3=DCS(2)*(X(JT3)-BX1)-DCS(1)*(Y(JT3)-BY1)
      Y3=DCS(1)*(X(JT3)-BX1)+DCS(2)*(Y(JT3)-BY1)
      PRHO=DENS(MAT)
      CALL PLATEM(Y2,X3,Y3,PRHO,PTH,DCS,PLTM)
      DO 27 K=1,9
      IF(NOSC(K).EQ.0) GO TO 27
      I=NOSC(K)
      DO 28 N=1,9
      IF(NOSC(N).EQ.0) GO TO 28
      J=NOSC(N)
      IF(J.LT.I) GO TO 28
      MM=(2*J+(I-1)*(2*NDF-I))/2
      SM(MM)=SM(MM)+PLTM(K,N)
   28 CONTINUE
   27 CONTINUE
   26 CONTINUE
  301 CONTINUE
C     STORE FOR REDUCTION
  225 CONTINUE
      DO 258 I=1,NLUMP
      NN=JMASS(I)
      IF(N1(NN).EQ.0) GO TO 258
      NNN=N1(NN)
      NS=(2*NNN+(NNN-1)*(2*NDF-NNN))/2
      SM(NS)=SM(NS)+RSMASS(NNN)
  258 CONTINUE
      DO 29 I=1,NDF
      NS=(2*I+(I-1)*(2*NDF-I))/2
      NF=(2*NDF+(I-1)*(2*NDF-I))/2
   29 WRITE(NDISC) (SM(J),J=NS,NF)
      NUMASS=NDF-NREDU
      CALL EIGEN(A,VALU,TEMP,B,C,DUM1,F,IDUM4,IDISC,JDISC,KDISC,NDISC,
     1MDISC,NDF,NMODF,NMODE,NREDU,NUMASS)
      GO TO 100
      END
```

```
$       FORTRAN DECK
CCOORDN     ASSIGNS A COORD. NO. TO EACH DEGREE OF FREEDOM AT EACH JOINT
C      NR1,NR2,NR3 = ARRAYS CONTAINING RESTRAINT INFO. FOR EACH DEGREE
C      OF FREEDOM AT EACH JOINT (FREE=0, CLAMPED=1)
C      N1,N2,N3 = COORD. NO. FOR EACH DEGREE OF FREEDOM (NORMAL
C      DISPLACEMENTS ARE NUMBERED FIRST)
C      NJTS = NO. OF JOINTS
C      NRFDU = NO. OF NORMAL DISPLACEMENTS
C      NDF = TOTAL NO. OF DEGREES OF FREEDOM (INCLUDING ROTATIONS)
       SUBROUTINE COORDN(NR1,NR2,NR3,N1,N2,N3,NJTS,NRFDU,NDF)
       DIMENSION NR1(50),NR2(50),NR3(50),N1(50),N2(50),N3(50)
       NO=1
       DO 10 I=1,NJTS
       IF(NR1(I).EQ.1) GO TO 10
       N1(I)=NO
       NO=NO+1
   10  CONTINUE
       NRFDU=NO-1
       DO 20 I=1,NJTS
       IF(NR2(I).EQ.1) GO TO 21
       N2(I)=NO
       NO=NO+1
   21  IF(NR3(I).EQ.1) GO TO 20
       N3(I)=NO
       NO=NO+1
   20  CONTINUE
       NDF=NO-1
       RETURN
       END
```

```
$       FORTRAN DECK
CTRANS        TRANSFORMATION DIRECTION COSINES
C       X1,Y1 = COORDS. OF POINT 1
C       X2,Y2 = COORDS. OF POINT 2
C       FL = DISTANCE BETWEEN POINTS 1 AND 2
C       DCS = DIRECTION COSINES OF VECTOR FROM POINT 1 TO POINT 2
        SUBROUTINE TRANS(X1,X2,Y1,Y2,FL,DCS)
        DIMENSION DCS(2)
        DCS(1)=(X2-X1)/FL
        DCS(2)=(Y2-Y1)/FL
        RETURN
        END
```

```
$       FORTRAN DECK
CBEAMK        PLANE GRID BEAM ELEMENT STIFFNESS MATRIX IN SYSTEM COORDS.
C       FL = BEAM LENGTH
C       E = YOUNG'S MODULUS
C       G = MODULUS OF RIGIDITY
C       XI = AREA MOMENT OF INERTIA
C       YJ = EFFECTIVE TORSIONAL MOMENT OF INERTIA
C       STM = STIFFNESS MATRIX
C       DCS = DIRECTION COSINES
        SUBROUTINE BEAMK(FL,E,G,XI,YJ,STM,DCS)
        DIMENSION STM(6,6),DCS(2)
        Z1=E*XI/FL
        Z2=G*YJ/FL
        STM(1,1)=12.*Z1/(FL*FL)
        STM(2,1)=6.*Z1*DCS(2)/FL
        STM(2,2)=4.*Z1*DCS(2)*DCS(2)+Z2*DCS(1)*DCS(1)
        STM(3,1)=-6.*Z1*DCS(1)/FL
        STM(3,2)=(-4.*Z1+Z2)*DCS(1)*DCS(2)
        STM(3,3)=4.*Z1*DCS(1)*DCS(1)+Z2*DCS(2)*DCS(2)
        STM(4,1)=-STM(1,1)
        STM(4,2)=-STM(2,1)
        STM(4,3)=-STM(3,1)
        STM(4,4)=STM(1,1)
        STM(5,1)=STM(2,1)
        STM(5,2)=2.*Z1*DCS(2)*DCS(2)-Z2*DCS(1)*DCS(1)
        STM(5,3)=-(2.*Z1+Z2)*DCS(1)*DCS(2)
        STM(5,4)=-STM(2,1)
        STM(5,5)=STM(2,2)
        STM(6,1)=STM(3,1)
        STM(6,2)=STM(3,3)
        STM(6,3)=2.*Z1*DCS(1)*DCS(1)-Z2*DCS(2)*DCS(2)
        STM(6,4)=-STM(3,1)
        STM(6,5)=STM(3,2)
        STM(6,6)=STM(3,3)
        DO 10 I=2,6
        N=I-1
        DO 10 J=1,N
   10   STM(J,I)=STM(I,J)
        RETURN
        END
```

```
$       FORTRAN DECK
CBEAMM       PLANE GRID BEAM ELEMENT MASS MATRIX IN SYSTEM COORDS.
C      FL = BEAM LENGTH
C      RHO = DENSITY
C      A = CROSS SECTIONAL AREA
C      XI = AREA MOMENT OF INERTIA
C      XJ = EFFECTIVE TORSIONAL MOMENT OF INERTIA
C      SMM = MASS MATRIX
C      DCS = DIRECTION COSINES
       SUBROUTINE BEAMM(FL,RHO,A,XI,XJ,SMM,DCS)
       DIMENSION SMM(6,6),DCS(2)
       Z1=RHO*A*FL
       Z2=FL**2
       Z3=XI/A
       DD=Z1*(13./35.+(6.*Z3)/(5.*Z2))
       CC=Z1*(11.*FL/210.+Z3/(10.*FL))
       AA=Z1*(Z2/105.+2.*Z3/15.)
       TT=Z1*XJ/(3.*A)
       RR=Z1*(9./70.-(6.*Z3)/(5.*Z2.))
       QQ=Z1*(13.*FL/420.-Z3/(10.*FL))
       SS=-Z1*(Z2/140.+Z3/30.)
       PP=Z1*XJ/(6.*A)
       SMM(1,1)=DD
       SMM(2,1)=CC*DCS(2)
       SMM(2,2)=AA*DCS(2)*DCS(2)+TT*DCS(1)*DCS(1)
       SMM(3,1)=-CC*DCS(1)
       SMM(3,2)=(-AA+TT)*DCS(1)*DCS(2)
       SMM(3,3)=AA*DCS(1)*DCS(1)+TT*DCS(2)*DCS(2)
       SMM(4,1)=RR
       SMM(4,2)=QQ*DCS(2)
       SMM(4,3)=-QQ*DCS(1)
       SMM(4,4)=SMM(1,1)
       SMM(5,1)=-SMM(4,2)
       SMM(5,2)=SS*DCS(2)*DCS(2)+PP*DCS(1)*DCS(1)
       SMM(5,3)=(-SS+PP)*DCS(1)*DCS(2)
       SMM(5,4)=-SMM(2,1)
       SMM(5,5)=SMM(2,2)
       SMM(6,1)=-SMM(4,3)
       SMM(6,2)=SMM(5,3)
       SMM(6,3)=SS*DCS(1)*DCS(1)+PP*DCS(2)*DCS(2)
       SMM(6,4)=-SMM(3,1)
       SMM(6,5)=SMM(3,2)
       SMM(6,6)=SMM(3,3)
       DO 10 I=2,6
       N=I-1
       DO 10 J=1,N
    10 SMM(J,I)=SMM(I,J)
       RETURN
       END
```

```
$       FORTRAN DECK
CPLATEK
C       THIS SUBROUTINE DETERMINES THE STIFFNESS MATRIX OF A
C       TRIANGLE PLATE ELEMENT IN SYSTEM COORDS.
C       Y2,X3,Y3 = COORDS. OF PLATE CORNERS IN LOCAL COURDINATES
C       DX,DY,D1,DXY,BETA = FLEXURAL RIGIDITY TERMS AND ANGLE OF MATERIAL
C       PRINCIPAL AXES W/O TRIANGLE LOCAL AXES
C       DCS = DIRECTION COSINES
C       PLTK = STIFFNESS MATRIX
        SUBROUTINE PLATEK(Y2,X3,Y3,DX,DY,D1,DXY,BETA,DCS,PLTK)
        DIMENSION PLTK(9,9),C(9,9),CINV(9,9),P(9,9),R(9,9)
        DIMENSION T(9,9),STIFF(9,9),DCS(2)
        EQUIVALENCE(P(1,1),STIFF(1,1)),          (R(1,1),T(1,1))
        CALL CMAT(Y2,X3,Y3,C)
        CALL MINV(C,CINV,9)
        CALL DINMAT(Y2,X3,Y3,DX,DY,D1,DXY,BETA,P)
        CALL MATMPY(P,CINV,R,9)
        DO 10 I=2,9
        N=I-1
        DO 10 J=1,N
        ZZ1=CINV(I,J)
        ZZ2=CINV(J,I)
        CINV(I,J)=ZZ2
        CINV(J,I)=ZZ1
   10 CONTINUE
        CALL MATMPY(CINV,R,STIFF,9)
        DO 400 I=1,9
        DO 400 J=1,9
  400 T(I,J)=0.
        T(1,1)=1.
        T(4,4)=1.
        T(7,7)=1.
        T(2,2)=DCS(2)
        T(3,3)=DCS(2)
        T(5,5)=DCS(2)
        T(6,6)=DCS(2)
        T(8,8)=DCS(2)
        T(9,9)=DCS(2)
        T(2,3)=-DCS(1)
        T(5,6)=-DCS(1)
        T(8,9)=-DCS(1)
        T(3,2)=DCS(1)
        T(6,5)=DCS(1)
        T(9,8)=DCS(1)
        CALL MATMPY(STIFF,T,C,9)
        T(2,3)=DCS(1)
        T(5,6)=DCS(1)
        T(8,9)=DCS(1)
        T(3,2)=-DCS(1)
        T(6,5)=-DCS(1)
        T(9,8)=-DCS(1)
        CALL MATMPY(T,C,PLTK,9)
        RETURN
```

```
$       FORTRAN DECK
CCMAT
C       THIS SUBROUTINE FORMS THE C MATRIX RELATING THE CORNER
C       DISPLACEMENTS TO THE POLYNOMIAL DEFLECTION COEFFICIENTS
C       FOR THE TRIANGULAR PLATE ELEMENT
C       Y2,X3,Y3 = COORDS. OF PLATE CORNERS IN LOCAL COORDINATES
C       C = C MATRIX
        SUBROUTINE CMAT(Y2,X3,Y3,C)
        DIMENSION C(9,9)
        DO 10 I=1,9
        DO 10 J=1,9
   10   C(I,J)=0.
        C(1,1)=1.
        C(2,3)=1.
        C(3,2)=-1.
        C(4,1)=1.
        C(4,3)=Y2
        C(4,6)=Y2**2
        C(4,9)=Y2**3
        C(5,3)=1.
        C(5,6)=2.*Y2
        C(5,9)=3.*Y2**2
        C(6,2)=-1.
        C(6,5)=-Y2
        C(6,8)=-Y2**2
        C(7,1)=1.
        C(7,2)=X3
        C(7,3)=Y3
        C(7,4)=X3**2
        C(7,5)=X3*Y3
        C(7,6)=Y3**2
        C(7,7)=X3**3
        C(7,8)=X3*Y3**2+Y3*X3**2
        C(7,9)=Y3**3
        C(8,3)=1.
        C(8,5)=X3
        C(8,6)=2.*Y3
        C(8,8)=2.*X3*Y3+X3**2
        C(8,9)=3.*Y3**2
        C(9,2)=-1.
        C(9,4)=-2.*X3
        C(9,5)=-Y3
        C(9,7)=-3.*X3**2
        C(9,8)=-(Y3**2+2.*X3*Y3)
        RETURN
        END
```

```
$       FORTRAN DECK
CMINV         MATRIX INVERSION SUBROUTINE
C       A = MATRIX TO BE INVERTED
C       U = INVERTED MATRIX
C       NM = ORDER OF MATRIX (.LE.9)
        SUBROUTINE MINV(A,U,NM)
        DIMENSION A(9,9),U(9,9)
        DO 9001 I=1,NM
        DO 9001 J=1,NM
        U(I,J)=0.0
        IF (I.EQ.J) U(I,J)=1.0
 9001   CONTINUE
        EPS=0.00000001
        DO 9015 I=1,NM
        K=I
        IF (I-NM) 9021,9007,9021
 9021   IF (A(I,I)-EPS) 9005,9006,9007
 9005   IF (-A(I,I)-EPS) 9006,9006,9007
 9006   K=K+1
        DO 9023 J=1,NM
        U(I,J)=U(I,J)+U(K,J)
 9023   A(I,J)=A(I,J)+A(K,J)
        GO TO 9021
 9007   DIV=A(I,I)
        DO 9009 J=1,NM
        U(I,J)=U(I,J)/DIV
 9009   A(I,J)=A(I,J)/DIV
        DO 9015 MM=1,NM
        DELT=A(MM,I)
        IF (ABS(DELT)-EPS) 9015,9015,9016
 9016   IF (MM-I) 9010,9015,9010
 9010   DO 9011 J=1,NM
        U(MM,J)=U(MM,J)-U(I,J)*DELT
 9011   A(MM,J)=A(MM,J)-A(I,J)*DELT
 9015   CONTINUE
        DO 9033 I=1,NM
        DO 9033 J=1,NM
 9033   A(I,J)=U(I,J)
        RETURN
        END
```

```
$      FORTRAN DECK
CDINMAT
C      THIS SUBROUTINE DETERMINES THE DOUBLE INTEGRAL MATRIX FOR
C      THE K EQUATION FOR THE TRIANGULAR PLATE ELEMENT
C      Y2,X3,Y3 = COORDS. OF PLATE CORNERS IN LOCAL COORDINATES
C      DX,DY,D1,DXY,BETA = FLEXURAL RIGIDITY TERMS AND ANGLE OF MATERIAL
C      PRINCIPAL AXES W/O TRIANGLE LOCAL AXES
C      P = DOUBLE INTEGRAL MATRIX
       SUBROUTINE DINMAT(Y2,X3,Y3,DX,DY,D1,DXY,BETA,P)
       DIMENSION P(9,9),D(3,3)
       DO 10 I=1,9
       DO 10 J=1,9
    10 P(I,J)=0.
       CALL DMAT(DX,DY,D1,DXY,BETA,D)
       A1=DBLINT(Y2,X3,Y3,0,0)
       A2=DBLINT(Y2,X3,Y3,1,0)
       A3=DBLINT(Y2,X3,Y3,2,0)
       A4=DBLINT(Y2,X3,Y3,0,1)
       A5=DBLINT(Y2,X3,Y3,0,2)
       A6=DBLINT(Y2,X3,Y3,1,1)
       P(4,4)=4.*D(1,1)*A1
       P(4,5)= 4.*D(1,3)*A1
       P(4,6)=4.*D(1,2)*A1
       P(4,7)=12.*D(1,1)*A2
       P(4,8)=4.*(D(1,1)*A4+D(1,2)*A2+2.*D(1,3)*(A2+A4))
       P(4,9)=12.*D(1,2)*A4
       P(5,5)=4.*D(3,3)*A1
       P(5,6)= 4.*D(3,2)*A1
       P(5,7)= 12.*D(3,1)*A2
       P(5,8)= 4.*(D(3,1)*A4+D(3,2)*A2+2.*D(3,3)*(A2+A4))
       P(5,9)= 12.*D(3,2)*A4
       P(6,6)=4.*D(2,2)*A1
       P(6,7)=12.*D(2,1)*A2
       P(6,8)=4.*(D(2,1)*A4+D(2,2)*A2+2.*D(2,3)*(A2+A4))
       P(6,9)=12.*D(2,2)*A4
       P(7,7)=36.*D(1,1)*A3
       P(7,8)=12.*(D(1,1)*A6+D(1,2)*A3+2.*D(1,3)*(A3+A6))
       P(7,9)=36.*D(1,2)*A6
       P(8,8)=4.*(D(1,1)*A5+D(1,2)*A6+2.*D(1,3)*(A6+A5))
      1       +4.*(D(2,1)*A6+D(2,2)*A3+2.*D(2,3)*(A3+A6))
      1       +8.*(D(3,1)*A6+D(3,2)*A3+2.*D(3,3)*(A3+A6))
      1       +8.*(D(3,1)*A5+D(3,2)*A6+2.*D(3,3)*(A6+A5))
       P(8,9)=12.*(D(1,2)*A5+D(2,2)*A6+2.*D(3,2)*(A6+A5))
       P(9,9)=36.*D(2,2)*A5
       DO 20 I=1,8
       N=I+1
       DO 20 J=N,9
    20 P(J,I)=P(I,J)
       RETURN
       END
```

```
$       FORTRAN DECK
CMATMPY
C       MULTIPLIES MATRICES A AND B TO GET C, ALL OF ORDER N*N
        SUBROUTINE MATMPY(A,B,C,N)
        DIMENSION A(9,9),B(9,9),C(9,9)
        DO 10 I=1,N
        DO 10 J=1,N
        C(I,J)=0.
        DO 10 K=1,N
   10 C(I,J)=C(I,J)+A(I,K)*B(K,J)
        RETURN
        END
```

SUBROUTINE DETERMINES THE FLEXURAL RIGIDITY MATRIX IN

```
      1      CDMAT
      2      C     THIS SUBROUTINE DETERMINES THE FLEXURAL RIGIDITY MATRIX IN
      3      C     TRIANGLE LOCAL COORDINATES
      4      C     DX,DY,D1,DXY,BETA = FLEXURAL RIGIDITY TERMS AND ANGLE OF MATERIAL
      5      C     PRINCIPAL AXES W/O TRIANGLE LOCAL AXES
      6      C     D = FLEXURAL RIGIDITY MATRIX IN TRIANGLE LOCAL COORDS.
      7            SUBROUTINE DMAT(DX,DY,D1,DXY,BETA,D)
      8            DIMENSION D(3,3)
      9            T11=(COS(BETA))**2                                          2
     10            T12=(SIN(BETA))**2                                          3
     11            T13=SIN(BETA)*COS(BETA)                                     4
     12            T21=T12                                                     5
     13            T22=T11                                                     6
     14            T23=-T13                                                    7
     15            T31=-2.*SIN(BETA)*COS(BETA)                                 8
     16            T32=-T31                                                    9
     17            T33=T11-T12                                                10
     18            Z11=DX*T11+D1*T12                                          11
     19            Z12=DX*T21+D1*T22                                          12
     20            Z13=DX*T31+D1*T32                                          13
     21            Z21=D1*T11+DY*T12                                          14
     22            Z22=D1*T21+DY*T22                                          15
     23            Z23=D1*T31+DY*T32                                          16
     24            Z31=DXY*T13                                                17
     25            Z32=DXY*T23                                                18
     26            Z33=DXY*T33                                                19
     27            D(1,1)=T11*Z11+T12*Z21+T13*Z31                             20
     28            D(1,2)=T11*Z12+T12*Z22+T13*Z32                             21
     29            D(1,3)=T11*Z13+T12*Z23+T13*Z33                             22
     30            D(2,1)=T21*Z11+T22*Z21+T23*Z31                             23
     31            D(2,2)=T21*Z12+T22*Z22+T23*Z32                             24
     32            D(2,3)=T21*Z13+T22*Z23+T23*Z33                             25
     33            D(3,1)=T31*Z11+T32*Z21+T33*Z31                             26
     34            D(3,2)=T31*Z12+T32*Z22+T33*Z32                             27
     35            D(3,3)=T31*Z13+T32*Z23+T33*Z33                             28
     36            RETURN                                                     29
     37            END
```

<><><>

```
$      FORTRAN DECK
DBLINT
C      THIS SUBROUTINE EVALUATES THE DOUBLE INTEGRALS APPEARING IN THE
C      EQUATIONS FOR K AND M FOR THE TRIANGULAR PLATE ELEMENT
C      Y2,X3,Y3 = COORDS. OF PLATE CORNERS IN LOCAL COORDINATES
C      M,N = POWER OF X AND Y RESPECTIVELY, PRZEMIENIECKI, PAGE 385
       FUNCTION DBLINT(Y2,X3,Y3,M,N)
       DIMENSION A1(2),B1(2),P1(7),P2(7),P3(7)
       EQUIVALENCE(B1(1),P3(1))
       IF(M-1) 40,41,42
   40  P1(1)=1.0
       N1=0
       GO TO 43
   41  P1(1)=-1.0
       P1(2)=1.0
       N1=1
       GO TO 43
   42  CONTINUE
       A1(1)=-1.0
       A1(2)=1.0
       B1(1)=-1.0
       B1(2)=1.0
       M1=1
       MM=M-1
       DO 10 J=1,MM
       CALL PLYMP(A1,1,B1,M1,P1,N1)
       NN1=N1+1
       DO 10 I=1,NN1
       B1(I)=P1(I)
       M1=N1
   10  CONTINUE
   43  CONTINUE
       IF(N-1) 50,51,52
   50  P2(1)=1.0
       N2=0
       GO TO 53
   51  P2(1)=-Y3+Y2
       P2(2)=Y3
       N2=1
       GO TO 53
   52  CONTINUE
       A1(1)=-Y3+Y2
       A1(2)=Y3
       B1(1)=-Y3+Y2
       B1(2)=Y3
       M1=1
       NN=N-1
       DO 20 J=1,NN
       CALL PLYMP(A1,1,B1,M1,P2,N2)
       NN2=N2+1
       DO 20 I=1,NN2
       B1(I)=P2(I)
```

```
      M1=N2
   20 CONTINUE
   23 CONTINUE
      CALL PLYMP(P1,N1,P2,N2,P3,N3)
      NN3=N3+1
      SOL=0.
      DO 30 I=1,NN3
      SOL=SOL+(X**(M+1))*Y2*(1./FLOAT(M+N+2))* P3(I)*(1./FLOAT(N3+2-I))
   30 CONTINUE
      POLINT=SOL
      RETURN
      END
```

```
$       FORTRAN DECK
CPLYMP          1/65
C               POLYNOMIAL MULTIPLY
      SUBROUTINE PLYMP(A,L,B,M,C,N)
C     C1-430L      9-1-64
      DIMENSION A(1),B(1),C(1)
      N = L + M
      L1 = N +
      DO 8 I = ,L1
 8    C(I) = 0
      L2 = L +
      M2 = M +
      DO 1 I =  ,L2
      DO 1 J = ,M2
      K = I+J
 1    C(K-1) = C(K-1) + A(I)*B(J)
      DO 2 K =  ,L1
      I1 = K
      IF(C(K)) 4,2,3
 2    CONTINUE
 3    IF(I1 - 1) 5,5,6
 6    N = L1 - I1
      N2 = N +
      DO 7 J = ,N2
      N1 = J + I1 - 1
 7    C(J) = C(N1)
 5    RETURN
      END
```

```
$      FORTRAN DECK
CPLATEM
C      THIS SUBROUTINE DETERMINES THE MASS MATRIX OF A
C      TRIANGLE PLATE ELEMENT IN SYSTEM COORDS.
C      Y2,X3,Y3 = COORDS. OF PLATE CORNERS IN LOCAL COORDINATES
C      PRHO = DENSITY
C      PTH = PLATE THICKNESS
C      DCS = DIRECTION COSINES
C      PLTM = MASS MATRIX
       SUBROUTINE PLATEM(Y2,X3,Y3,PRHO,PTH,DCS,PLTM)
       DIMENSION PLTM(9,9),C(9,9),CINV(9,9),P(9,9),R(9,9)
       DIMENSION T(9,9),FMASS(9,9),DCS(2)
       EQUIVALENCE (P(1,1),FMASS(1,1)),          (R(1,1),T(1,1))
       CALL CMAT(Y2,X3,Y3,C)
       CALL MINV(C,CINV,9)
       CALL DINMTM(Y2,X3,Y3,PRHO,PTH,P)
       CALL MATMPY(P,CINV,R,9)
       DO 10 I=2,9
       N=I-1
       DO 10 J=1,N
       ZZ1=CINV(I,J)
       ZZ2=CINV(J,I)
       CINV(I,J)=ZZ2
       CINV(J,I)=ZZ1
    10 CONTINUE
       CALL MATMPY(CINV,R,FMASS,9)
       DO 400 I=1,9
       DO 400 J=1,9
   400 T(I,J)=0.
       T(1,1)=1.
       T(4,4)=1.
       T(7,7)=1.
       T(2,2)=DCS(2)
       T(3,3)=DCS(2)
       T(5,5)=DCS(2)
       T(6,6)=DCS(2)
       T(8,8)=DCS(2)
       T(9,9)=DCS(2)
       T(2,3)=-DCS(1)
       T(5,6)=-DCS(1)
       T(8,9)=-DCS(1)
       T(3,2)=DCS(1)
       T(6,5)=DCS(1)
       T(9,8)=DCS(1)
       CALL MATMPY(FMASS,T,C,9)
       T(2,3)=DCS(1)
       T(5,6)=DCS(1)
       T(8,9)=DCS(1)
       T(3,2)=-DCS(1)
       T(6,5)=-DCS(1)
       T(9,8)=-DCS(1)
       CALL MATMPY(T,C,PLTM,9)
       RETURN
       END
```

```
$      FORTRAN DECK
CDINMTM
C      THIS SUBROUTINE DETERMINES THE DOUBLE INTEGRAL MATRIX FOR
C      THE TRIANGULAR PLATE M MATRIX - PRZEMIENIECKI, PAGE 304
C      Y2,X3,Y3 = COORDS. OF PLATE CORNERS IN LOCAL COORDINATES
C      PRHO = DENSITY
C      PTH = PLATE THICKNESS
C      P = DOUBLE INTEGRAL MATRIX
       SUBROUTINE DINMTM(Y2,X3,Y3,PRHO,PTH,P)
       DIMENSION P(9,9)
       P(1,1)=DBLINT(Y2,X3,Y3,0,0)
       P(2,1)=DBLINT(Y2,X3,Y3,1,0)
       P(2,2)=DBLINT(Y2,X3,Y3,2,0)
       P(3,1)=DBLINT(Y2,X3,Y3,0,1)
       P(3,2)=DBLINT(Y2,X3,Y3,1,1)
       P(3,3)=DBLINT(Y2,X3,Y3,0,2)
       P(4,1)=P(2,2)
       P(4,2)=DBLINT(Y2,X3,Y3,3,0)
       P(4,3)=DBLINT(Y2,X3,Y3,2,1)
       P(4,4)=DBLINT(Y2,X3,Y3,4,0)
       P(5,1)=P(3,2)
       P(5,2)=P(4,3)
       P(5,3)=DBLINT(Y2,X3,Y3,1,2)
       P(5,4)=DBLINT(Y2,X3,Y3,3,1)
       P(5,5)=DBLINT(Y2,X3,Y3,2,2)
       P(6,1)=P(3,3)
       P(6,2)=P(5,3)
       P(6,3)=DBLINT(Y2,X3,Y3,0,3)
       P(6,4)=P(5,5)
       P(6,5)=DBLINT(Y2,X3,Y3,1,3)
       P(6,6)=DBLINT(Y2,X3,Y3,0,4)
       P(7,1)=P(4,2)
       P(7,2)=P(4,4)
       P(7,3)=P(5,4)
       P(7,4)=DBLINT(Y2,X3,Y3,5,0)
       P(7,5)=DBLINT(Y2,X3,Y3,4,1)
       P(7,6)=DBLINT(Y2,X3,Y3,3,2)
       P(7,7)=DBLINT(Y2,X3,Y3,6,0)
       P(8,1)=P(5,3)+P(4,3)
       P(8,2)=P(6,4)+P(5,4)
       P(8,3)=P(6,5)+P(5,5)
       P(8,4)=P(7,6)+P(7,5)
       P(8,5)=DBLINT(Y2,X3,Y3,2,3)+P(7,6)
       P(8,6)=DBLINT(Y2,X3,Y3,1,4)+DBLINT(Y2,X3,Y3,2,3)
       P(8,7)=DBLINT(Y2,X3,Y3,4,2)+DBLINT(Y2,X3,Y3,5,1)
       P(8,8)=DBLINT(Y2,X3,Y3,2,4)+DBLINT(Y2,X3,Y3,4,2)
      1   +2.*DBLINT(Y2,X3,Y3,3,3)
       P(9,1)=P(6,3)
       P(9,2)=P(6,5)
       P(9,3)=P(6,6)
       P(9,4)=DBLINT(Y2,X3,Y3,2,3)
       P(9,5)=DBLINT(Y2,X3,Y3,1,4)
```

```
      P(9,6)=DBLINT(Y2,X3,Y3,6,5)
      P(9,7)=DBLINT(Y2,X3,Y3,3,3)
      P(9,8)=DBLINT(Y2,X3,Y3,1,5)+DBLINT(Y2,X3,Y3,2,4)
      P(9,9)=DBLINT(Y2,X3,Y3,6,6)
      DO 10 I=1,9
      DO 10 J=1,I
   10 P(I,J)=P(I,J)*PRHO*PTH
      DO 20 I=2,9
      N=I-1
      DO 20 J=1,N
      P(J,I)=P(I,J)
   20 CONTINUE
      RETURN
      END
```

```
$       FORTRAN DECK
CEIGFN        REDUCES STIFFNESS MATRIX AND INVERTS IT, REDUCES MASS MATRIX
C             DETERMINES EIGENVALUES AND EIGENVECTORS
C       THE ARGUMENTS ARE=
C     A - VECTOR OF LENGTH NRDF*(NRDF+1)/2
C     VALU - VECTOR OF LENGTH NEIG
C       TEMP,B,C,DUM3, - VECTORS OF LENGTH NRDF OR NMASS (SMALLER)
C       E - MATRIX OF DIMENSION (NRDF,3)
C       IDUM4 - VECTOR OF LENGTH NRDF OR NMASS (SMALLER)
C       ITAPE,JTAPE, NTAPE, MTAPE, - THESE ARE VARIOUS TAPES
C       NRDF - NUMBER OF DEGREES OF FREEDOM OF THE SYSTEM
C       NEIG - NUMBER OF EIGENVALUES DESIRED
C       NVEC - NUMBER OF EIGENVECTORS DESIRED
C       NMASS=NO. OF NORMAL DISPLACEMENTS
C       NOMASS=NO. OF ROTATIONAL DEGREES OF FREEDOM
C       STIFF IS ON MTAPE IN COMPACT FORM
C       MASS IS ON NTAPE IN COMPACT FORM
        SUBROUTINE EIGFN(A,VALU,TEMP,B,C,DUM3,E,IDUM4,ITAPE,JTAPE,KTAPE,
       1NTAPE,MTAPE,NRDF,NEIG,NVEC,NMASS,NOMASS)
        DIMENSION DUM3(NRDF),IDUM4(1),A(1),VALU(1),B(1),C(1),E(NRDF,3),
       1TEMP(1)
        DIMENSION ILOW(50),IHIGH(50)
        INTEGER OUT
        DATA Q1/6HFLEXIB/,Q2/6HILITY /,Q3/6HMATRIX/
        DATA Q4/6HWEIGHT/,Q5/6H MATRI/,Q6/6HX     /
        DO 56 II=1,NMASS
        ILOW(II)=1
   56   IHIGH(II)=NMASS
        OUT=6
        REWIND MTAPE
        REWIND NTAPE
        NTEMP=NMASS
        CALL DIVID(NMASS,NOMASS,MTAPE,JTAPE,ITAPE,A,B)
        CALL ZROMAK(A,B,C,DUM3,NMASS,NOMASS,ITAPE,JTAPE,MTAPE,KTAPE)
        CALL DIVID(NMASS,NOMASS,NTAPE,JTAPE,ITAPE,A,B)
        CALL ZROMAM(A,B,C,DUM3,NMASS,NOMASS,ITAPE,JTAPE,NTAPE,KTAPE)
  345   CONTINUE
        REWIND MTAPE
        REWIND NTAPE
        NREDU=NMASS
        NRMX=NREDU*(NREDU+1)/2
        READ(MTAPE) (A(I),I=1,NRMX)
        WRITE(OUT,5500)
 5500   FORMAT(///85HR E D U C E D    U P P E R    T R I A N G U L A R
       1S T I F F N E S S    M A T R I X)
        DO 5501 I=1,NREDU
        NS=(2*I+(I-1)*(2*NREDU-I))/2
        NE=(2*NREDU+(I-1)*(2*NREDU-I))/2
        WRITE(OUT,5502) I,(A(J),J=NS,NE)
 5502   FORMAT(/3HROW,I4,8(/9E14.5))
 5501   CONTINUE
        CALL SYMINV(A,NREDU)
        WRITE(OUT,5503)
 5503   FORMAT(///89HR E D U C E D    U P P E R    T R I A N G U L A R
       1F L E X I B I L I T Y    M A T R I X)
        PUNCH 5602, ((ILOW(K),IHIGH(K)),K=1,NREDU)
 5602   FORMAT (18I4)
        DO 5504 I=1,NREDU
        NS=(2*I+(I-1)*(2*NREDU-I))/2
        NE=(2*NREDU+(I-1)*(2*NREDU-I))/2
 5504   WRITE(OUT,5502) I,(A(J),J=NS,NE)
```

```
      PUNCH 6011, Q1,Q2,Q3
 6011 FORMAT(3A6)
      DO 5507 I=1,NREDU
      II=I-1
      IF(II.EQ.0) GO TO 5508
      DO 5509 J=1,II
      NU=(2*I+(J-1)*(2*I-J))/2+(J-1)*(NREDU-I)
 5509 B(J)=A(NU)
 5508 CONTINUE
      NS=(2*I+(I-1)*(2*NREDU-I))/2
      NE=(2*NREDU+(I-1)*(2*NREDU-I))/2
      J=I
      DO 5510 JJ=NS,NE
      B(J)=A(JJ)
 5510 J=J+1
      PUNCH 6010,(B(J),J=1,NREDU)
 6010 FORMAT(1P6E12.5)
 5507 CONTINUE
C     OPTION TO EXPAND REDUCED FLEXIBILITY MATRIX TO FULL MATRIX BY
C     INSERTING 1 OR 2 ZERO ROWS AND COLUMNS REPRESENTING ATTACH POINTS.
C     CODE , NCOD = 1  OPTION EXECUTED , NCOD = 0  OPTION NOT EXECUTED
      READ(5,560) NCOD
  560 FORMAT (I6)
      IF(NCOD) 580,580,570
  570 CALL FULFL (A,NREDU)
  580 READ(NTAPE) (A(I),I=1,NRMX)
      DO 6012 I=1,NRMX
 6012 A(I)=A(I)*32.174*12.
      WRITE(OUT,5505)
 5505 FORMAT(///79HR E D U C E D    U P P E R    T R I A N G U L A R
     1W E I G H T    M A T R I X)
      DO 5506 I=1,NREDU
      NS=(2*I+(I-1)*(2*NREDU-I))/2
      NE=(2*NREDU+(I-1)*(2*NREDU-I))/2
 5506 WRITE(OUT,5502) I,(A(J),J=NS,NE)
      PUNCH 6011, Q4,Q5,Q6
      DO 5511 I=1,NREDU
      II=I
      IF(II.EQ.0) GO TO 5512
      DO 5513 J=1,II
      NU=(2*I+(J-1)*(2*I-J))/2+(J-1)*(NREDU-I)
 5513 B(J)=A(NU)
 5512 CONTINUE
      NS=(2*I+(I-1)*(2*NREDU-I))/2
      NE=(2*NREDU+(I-1)*(2*NREDU-I))/2
      J=I
      DO 5514 JJ=NS,NE
      B(J)=A(JJ)
 5514 J=J+1
      PUNCH 6010,(B(J),J=1,NREDU)
 5511 CONTINUE
      IF(NEIG.EQ.0) RETURN
      NMAX=NTEMP*(NTEMP+1)/2
   30 CONTINUE
C     READ IN THE MASS MATRIX
      REWIND NTAPE
      READ(NTAPE) (A(I),I=1,NRMX)
      REWIND NTAPE
  355 CONTINUE
      CALL EIGMAT(NTEMP,A,VALU,TEMP,R,C,DUM3,E,IDUM4,NTAPE,NTAPE,JTAPE,
     1ITAPE,NEIG,NVEC)
```

```
  100 CONTINUE
      DO 60 I=1,NEIG
      DUM3(I)=SQRT(VALU(I))/6.2831853
   60 CONTINUE
      WRITE(OUT,9009)
      WRITE(OUT,9005) (I,DUM3(I),I=1,NEIG)
 9009 FORMAT(1H1,43X,33HHERE ARE THE NATURAL FREQUENCIES          ///)
 9005 FORMAT(35X,29HTHE NATURAL FREQUENCY NUMBER  I3,2X,2HIS F12.3,2X,
     13HCPS)
 9008 FORMAT(1H1,38X,43HHERE ARE THE EIGENVALUES AND EIGENVECTORS  ///)
      RETURN
      END
```

```
$      FORTRAN DECK
CFULFL       EXPANDS REDUCED FLEXIBILITY MATRIX BY INSERTING 1 OR 2 ZERO      1
C            ROWS AND COLUMNS REPRESENTING ATTACH POINTS.                     2
C     THE ARGUMENTS ARE                                                       3
C     B(I) = REDUCED FLEXIBILITY MATRIX IN COMPACT FORM                       4
C     NXC = ORDER OF REDUCED FLEX. MATRIX                                     5
C     INPUT DATA REQUIRED                                                     6
C     NR = NO. OF ATTACH POINTS (1 OR 2)                                      7
C     NNE,NWO = MASS NUMBERS OF ATTACH POINTS 1 AND 2 RESP.                   8
C                                                                             9
      SUBROUTINE FULFL(B,NXC)                                                10
      DIMENSION B(1),D(1275),C(50)                                           15
      DATA 07/6HEXPAND/,08/6HED FLE/,09/6HXIBILI/,010/6HTY MAT/,011/6HRI     20
     1X    /                                                                 25
      READ(5,1)NR,NNE,NWO                                                    30
    1 FORMAT (9I8)                                                           35
      MS=NXC+NR                                                              40
      MMS=MS*(MS+1)/2                                                        45
      DO 50 I=1,MMS                                                          50
   50 D(I)=0.0                                                               55
      JJJ=0                                                                  60
      KK=0                                                                   65
      JJ=0                                                                   70
      DO 100 J=1,MS                                                          75
      IF(J.EQ.NNE.OR.J.EQ.NWO)GO TO 99                                       80
      I=JJ+1                                                                 85
      JJ=I+NXC-J+JJJ                                                         90
      KKK=J-1                                                                95
      DO 98 JK=I,JJ                                                         100
      KKK=KKK+1                                                             105
      KK=KK+1                                                               110
      IF(KKK.EQ.NNE.OR.KKK.EQ.NWO)GO TO 96                                  115
      GO TO 97                                                              120
   96 KK=KK+1                                                               125
   97 D(KK)=B(JK)                                                           130
   98 CONTINUE                                                              135
      GO TO 100                                                             140
   99 KK=KK+MS-J+1                                                          145
      JJJ=JJJ+1                                                             150
  100 CONTINUE                                                              155
      WRITE(6,2)                                                            160
    2 FORMAT(///86HU P P E R    T R I A N G L E - E X P A N D E D    F L    165
     1 E X I B I L I T Y    M A T R I X)                                     170
      DO 10 I=1,MS                                                          175
      NS=(2*I+(I-1)*(2*MS-I))/2                                             180
      NE=(2*MS+(I-1)*(2*MS-I))/2                                            185
      WRITE(6,3)I,(D(J),J=NS,NE)                                            190
    3 FORMAT(/3HROW,I4/(9E14.5))                                            195
   10 CONTINUE                                                              200
      PUNCH 4,07,08,09,010,011                                              205
    4 FORMAT(5A6)                                                           210
      DO 20 I=1,MS                                                          215
      II=I-1                                                                220
      IF(II.EQ.0) GO TO 18                                                  225
      DO 19 J=1,II                                                          230
      NU=(2*I+(J-1)*(2*I-J))/2+(J-1)*(MS-I)                                 235
   19 C(J)=D(NU)                                                            240
   18 CONTINUE                                                              245
      NS=(2*I+(I-1)*(2*MS-I))/2                                             250
      NE=(2*MS+(I-1)*(2*MS-I))/2                                            255
      J=I                                                                   260
```

```
      DO 16 JJ=NS,NE
      C(J)=D(JJ)
   16 J=J+1
      PUNCH 5,(C(J),J=1,MS)
    5 FORMAT(1P6E12.5)
   20 CONTINUE
      RETURN
      END
```

```
$       FORTRAN DECK
CDIVID
C       N=NO. OF NORMAL DISPLACEMENTS
C       M=NO. OF ROTATIONAL  D.O.F.
C       NTPE-CONTAINS STIFFNESS (OR MASS) MATRIX
C       MTPE-K12 (M12) STORED
C       ITPE-K11 (M11) STORED
C       A- DUMMY  STORAGE VECTOR,LARGER  OF (N*(N+1)/2 OR M*(M+1)/2)
        SUBROUTINE DIVID (N,M,NTPE,MTPE,ITPE,A,B)
        DIMENSION A(1),B(1)
        REWIND ITPE
        REWIND NTPE
        REWIND MTPE
        NMAX=N*(N+1)/2
        MMAX=M*(M+1)/2
        NM=N+M
        ICNT=0
        DO 10 I=1,N
        II=NM-I+1
        READ(NTPE) (B(J),J=1,II)
        ID=II-M
        DO 20 J=1,ID
        ICNT=ICNT+1
   20   A(ICNT)=B(J)
        ID1=ID+1
        JCNT=0
        DO 30    J=ID1,II
        JCNT=JCNT+1
   30   B(JCNT)=B(J)
        WRITE(MTPE) (B(J),J=1,M)
   10   CONTINUE
        WRITE(ITPE) (A(J),J=1,NMAX)
        REWIND MTPE
        REWIND ITPE
        ID=0
        ICNT=0
        DO 50    I=1,M
        II=M-ICNT
        READ(NTPE) (B(J),J=1,II)
        ICNT=ICNT+1
        DO 60   J=1,II
        ID=ID+1
   60   A(ID)=B(J)
   50   CONTINUE
        RETURN
        END
```

```
$       FORTRAN DECK
CZROMAK
C       D IS A DUMMY VECTOR WITH STORAGE N OR M (LARGER)
C       A IS A DUMMY VECTOR WITH STORAGE  N*(N+1)/2  OR M*(M+1)/2 (LARGER
C       B IS A DUMMY VECTOR WITH STORAGE  N OR M  (LARGER)
C       C IS A DUMMY VECTOR WITH STORAGE  N OR M  (LARGER)
C       N=NO. OF NORMAL DISPLACEMENTS
C       M=NO. OF ROTATIONAL  D.O.F.
C       NTPE CONTAINS  K11 MATRIX
C       MTPE CONTAINS  K12 MATRIX
C       ITPE SCRATCH  TAPE
C       KTPE STORES K12*K22**(-1)
C       A INITIALLY CONTAINS K22 INVERSE
C***    REDUCED STIFFNESS MATRIX IS STORED ON ITPE
        SUBROUTINE ZROMAK(A,B,C,D,N,M,NTPE,MTPE,ITPE,KTPE)
        DIMENSION A(1),B(1),C(1),D(1)
        DOUBLE PRECISION SUM,DP1,DP2
        CALL SYMINV( A,M)
        REWIND MTPE
        REWIND ITPE
        REWIND NTPE
        REWIND KTPE
        NMAX=N*(N+1)/2
        MMAX=M*(M+1)/2
        DO 10    KK=1,N
        READ(MTPE) (B(I),I=1,M)
        ICNT=0
        DO 1000  IK=1,M
        JJ=IK
        JK=IK
        DO 20    J=JJ,M
        ICNT=ICNT+1
 20     C(J)=A(ICNT)
        IJ=JJ-1
        JA=M
        ID=IK
        DO 30 J=1,JJ
        IF(JJ.EQ.0) GO TO 30
        C(J)=A(ID)
        JA=JA-1
        ID=ID+JA
 30     CONTINUE
        SUM=0.000
        DO 50    J=1,M
        DP1=B(J)
        DP2=C(J)
 50     SUM=SUM+DP1*DP2
        D(JK)= SUM
 1000   CONTINUE
        WRITE (ITPE)  (D(J),J=1,M)
        WRITE (KTPE) (D(J),J=1,M)
 10     CONTINUE
        REWIND ITPE
```

```
      REWIND MTPE
      REWIND NTPE
      REWIND KTPE
      READ (NTPE) (A(J),J=1,NMAX)
      ICNT=0
      DO 60  KK=1,N
      READ (ITPE) (D(J),J=1,M)
      KI=KK
      DO 70   KJ=1,N
      READ(MTPE)(C(J),J=1,M)
      KP=KJ
      IF(KP.LT.KI)  GO TO  70
      SUM=0.0D0
      DO 80   KR=1,M
      DP1=D(KR)
      DP2=C(KR)
   80 SUM=SUM +DP1*DP2
      ICNT=ICNT+
      SM=SUM
      A(ICNT)=A(ICNT)-SM
   70 CONTINUE
      REWIND MTPE
   60 CONTINUE
      REWIND NTPE
      REWIND MTPE
      REWIND ITPE
      WRITE(ITPE) (A(I),I=1,NMAX)
      REWIND ITPE
      RETURN
      END
```

```
$ ?    FORTRAN DECK
CZROMAM
C       N=NO. OF NORMAL DISPLACEMENTS
C       M=NO. OF ROTATIONAL  D.O.F.
C     . NTPE CONTAINS M11 MATRIX
C       MTPE CONTAINS M12 MATRIX
C       ITPE SCRATCH TAPE
C       KTPE CONTAINS K12*K22**(-1)
C***    REDUCED MASS MATRIX IS STORED ON ITPE
        SUBROUTINE ZROMAM(A,B,C,D,N,M,NTPE,MTPE,ITPE,KTPE)
        DIMENSION A(1),B(1),C(1),D(1)
        DOUBLE PRECISION SUM1,SUM2,DP1,DP2,DP3
        NMASS=N
        REWIND MTPE
        REWIND ITPE
        REWIND NTPE
        REWIND KTPE
        NMAX=N*(N+1)/2
        DO 10 KK=1,N
        READ(KTPE) (B(I),I=1,M)
        ICNT=0
        DO 1000 IK=1,M
        JJ=IK
        JK=IK
        DO 20 J=JJ,M
        ICNT=ICNT+1
   20   C(J)=A(ICNT)
        JJ=JJ-1
        JA=M
        ID=IK
        DO 30 J=1,JJ
        IF(JJ.EQ.0) GO TO 30
        C(J)=A(ID)
        JA=JA-1
        ID=ID+JA
   30   CONTINUE
        SUM1=0.D0
        DO 50 J=1,M
        DP1=B(J)
        DP2=C(J)
   50   SUM1=SUM1+DP1*DP2
        D(JK)=SUM1
 1000   CONTINUE
        WRITE(ITPE) (D(J),J=1,M)
   10   CONTINUE
        REWIND ITPE
        REWIND MTPE
        REWIND NTPE
        REWIND KTPE
        READ(NTPE) (A(J),J=1,NMAX)
        DO 60 KK=1,N
        READ(MTPE) (B(J),J=1,M)
```

```
      READ(ITPE) (B(J),J=1,M)
      DO 70 KJ=1,N
      READ(KTPE) (C(J),J=1,M)
      SUM1=0.D0
      SUM2=0.D0
      DO 60 KR=1,M
      DP1=B(KR)
      DP2=D(KR)
      DP3=C(KR)
      SUM1=SUM1+DP1*DP3
   60 SUM2=SUM2+DP2*DP3
      SM1=SUM1
      SM2=SUM2
      IF(KJ.GE.KK) MM=(2*KJ+(KK-1)*(2*NMASS-KK))/2
      IF(KJ.GE.KK) A(MM)=A(MM)-SM1+SM2
      IF(KJ.LE.KK) MM=(2*KK+(KJ-1)*(2*NMASS-KJ))/2
      IF(KJ.LE.KK) A(MM)=A(MM)-SM1
   70 CONTINUE
      REWIND KTPE
   80 CONTINUE
      REWIND NTPE
      REWIND MTPE
      REWIND ITPE
      REWIND KTPE
      WRITE(ITPE) (A(I),I=1,NMAX)
      REWIND ITPE
      RETURN
      END
```

```
$       FORTRAN DECK
CSYMINV
C       A  IS THE UPPER TRIANGLE OF THE SYMMETRIC MATRIX TO BE INVERTED.  S
C       ELEMENTS ARE STORED ROWWISE.
C       N = ORDER OF MATRIX
C       PROGRAM INVERTS IN PLACE.                                         S
        SUBROUTINE SYMINV(A,N)                                            S
        DIMENSION A(1)
        NMAX=N*(N+1)/2
        A(1)=SQRT(A(1))                                                   S
        DO 100 IJ=2,N
  100   A(IJ)=A(IJ)/A(1)                                                  C
        A(1)=1.0/A(1)                                                     S
        IM1=1
        IJ=N
        DO 1000 I=2,N                                                     S
        II=IJ+1                                                           S
        IJ=II
        DO 200 J=I,N
        JMI=J-I                                                           S
        LI=I
        LJ=J
        DO 120 L=1,IM1                                                    S
        A(IJ)=A(IJ)-A(LI)*A(LJ)                                           S
        LI=LI+N-L
  120   LJ=LI+JMI                                                         S
  200   IJ=IJ+1                                                           S
        A(II)=SQRT(A(II))
        JI=I
        JJ=1                                                              S
        DO 500 J=1,IM1
        A(JI)=A(JJ)*A(JI)
        IF(J-IM1)300,420,420                                              S
  300   JP1=J+1                                                           S
        JL=JJ
        LI=JI
        DO 400 L=JP1,IM1                                                  S
        JL=JL+1
        LI=LI+N-L+1
  400   A(JI)=A(JI)+A(JL)*A(LI)                                           S
  420   A(JI)=-A(JI)/A(II)                                                S
        JI=JI+N-J
  500   JJ=JJ+N-J+1                                                       S
        IF(I-N)600,900,900                                                S
  600   IP1=I+1
        IJ=II
        DO 700 J=IP1,N                                                    S
        IJ=IJ+1
  700   A(IJ)=A(IJ)/A(II)                                                 S
  900   A(II)=1.0/A(II)                                                   S
 1000   IM1=I                                                             S
        II=I
```

```
      DO 2000 I=1,N                                                     S
      JJ=II                                                             S
      IJ=II                                                             S
      DO 1400 J=I,N                                                     S
      A(IJ)=A(IJ)*A(JJ)                                                 S
      JP1=J+1                                                           S
      IF(JP1-N)1100,1100,1400                                           S
1100  IL=IJ                                                             S
      JL=JJ                                                             S
      DO 1200 L=JP1,N                                                   S
      IL=IL+1                                                           S
      JL=JL+1                                                           S
1200  A(IJ)=A(IJ)+A(IL)*A(JL)                                           S
      JJ=JL+1                                                           S
1400  IJ=IJ+1                                                           S
2000  II=IJ                                                             S
      RETURN                                                            S
      END
```

```
$      FORTRAN DECK
CEIGMAT
C      THIS SUBROUTINE FINDS THE EIGENVALUES AND EIGENVECTORS FOR
C      SYMMETRIC MASS AND STIFFNESS MATRICES.
C      THE ARGUMENTS ARE--
C        N- ORDER OF MATRICES.
C        A-  DUMMY VECTOR WITH DIMENSION IN MAIN PROGRAM OF N*(N+1)/2
C        VALU-  STORAGE FOR EIGENVALUES. MUST BE DIMENSIONED IN THE MAIN
C               PROGRAM AS A VECTOR OF LENGTH NEIG.
C        TEMP,B,C,D,-  DUMMY VECTORS WITH DIMENSION OF N IN MAIN PROGRAM.
C        F-  DUMMY ARRAY WITH DIMENSIONS OF (N,3) IN MAIN PROGRAM.
C        IDUM-  DUMMY INTEGER VECTOR WITH DIMENSION OF N IN MAIN PROGRAM.
C        MTAPE-  TAPE WHERE STIFFNESS MATRIX IS STORED IN COMPACT FORM.
C        NTAPE-  TAPE WHERE MASS MATRIX IS STORED IN COMPACT FORM.
C        JTAPE,ITAPE-  SCRATCH TAPES.
C        NEIG-  NUMBER OF EIGENVALUES DESIRED.
C        NVEC-  NUMBER OF EIGENVECTORS DESIRED. MUST BE EQUAL TO OR LESS
C               THAN NEIG.
C      THE MASS AND STIFFNESS MATRICES ARE STORED IN COMPACT FORM AS
C      VECTORS. ONLY THE UPPER TRIANGLE OF THESE MATRICES(BY ROWS) IS
C      STORED.
       SUBROUTINE EIGMAT(N,A,VALU,TEMP,B,C,D,F,IDUM,MTAPE,NTAPE,JTAPE,
      1ITAPE,NEIG,NVEC)
       DIMENSION A(1),TEMP(1),VALU(1),B(1),C(1),D(1),F(N,3),IDUM(1)
       DOUBLE PRECISION SUM,SUM1
       INTEGER OUT
       OUT=6
       REWIND ITAPE
       REWIND JTAPE
       REWIND NTAPE
       REWIND MTAPE
       M=2*N
       NMAX=N*(N+1)/2
C* * * * * * * * * * * * * * * * * * * * * * * * * * * * * * * * * * * * * *
C      STEP 1
C      READ IN M BY ROWS IN COMPACTED FORM
C      REPLACE M BY (L)TRANSPOSE, WHERE M=L*(L)TRANSPOSE
C      CALCULATE FIRST ROW
       READ (NTAPE) (A(I),I=1,NMAX)
       REWIND NTAPE
     5 CONTINUE
       A(1)=SQRT(A(1))
       DO 10 I=2,N
    10 A(I)=A(I)/A(1)
C     CALCULATE ALL THE OTHER ROWS
       IND=N
       DO 40 I=2,N
       IND=IND+1
       SUM=0.D0
       K1=I-1
       DO 50 JJ=1,K1
       MJ=(M-JJ)*(JJ-1)/2+I
```

```
   20 SUM=SUM+A(MJ)*A(MJ)
      A(IND)=DSQRT(A(IND)-SUM)
      IF(IND.EQ.NMAX) GO TO 100
      SUM1=A(IND)
      K1=I+1
      DO 99 J=K1,N
      IND=IND+1
      SUM=0.D0
      II=I-1
      DO 60 JJ=1,II
      K=(M-JJ)*(JJ-1)/2
      KI=K+I
      KJ=K+J
   60 SUM=SUM+A(KI)*A(KJ)
      A(IND)=(A(IND)-SUM)/SUM1
   99 CONTINUE
  100 CONTINUE
  101 CONTINUE
C     CHECK FOR SINGULAR MASS MATRIX
      DO 102 I=1,N
      KI=(M-I)*(I-1)/2+I
      IF(A(KI).EQ.0.) GO TO 1090
  102 CONTINUE
C     THIS COMPLETES STEP 1
C* * * * * * * * * * * * * * * * * * * * * * * * * * * * * * * * * * * * * * *
C     STEP 2
C     WRITE (L)TRANSPOSE ON TAPE BY COLUMNS
C     PUT (L)TRANSPOSE INTO TEMPORARY STORAGE (TEMP--A VECTOR)
C     AND THEN WRITE TEMP ON TAPE
      KTAPE=NTAPE
  310 IND=0
      DO 340 J=1,N
      DO 330 I=1,J
      IND=IND+1
      MIJ=(M-I)*(I-1)/2+J
      TEMP(IND)=A(MIJ)
  330 CONTINUE
      WRITE(KTAPE) (TEMP(JJ),JJ=1,IND)
      IND=0
  340 CONTINUE
C     THIS COMPLETES STEP 2
C* * * * * * * * * * * * * * * * * * * * * * * * * * * * * * * * * * * * * * *
C     STEP 3
C     ((L)TRANSPOSE) INVERSE REPLACES (L)TRANSPOSE IN CORE
C     REPLACEMENT IS DONE BY LAST COLUMN FIRST--WORKING UP THE COLUMN
      DO 410 I=1,N
      IND=(I*(M+1-I))/2-N
  410 A(IND)=1./A(IND)
      DO 499 J=2,N
      JJ=(N+2)-J
      DO 490 I=2,JJ
      IND=(N+J+I-3)*(JJ-I)/2
      SUM=0.D0
```

```
      K1=JJ-I+2
      DO 450 K=K1,JJ
      IDK=IND+K
      MK=(M-K)*(K-1)/2+JJ
  450 SUM=SUM+A(IDK)*A(MK)
      IND=IND+JJ
      IDI=IND-I+1
  490 A(IND)=-SUM*A(IDI)
  499 CONTINUE
C     END OF STEP 5
C* * * * * * * * * * * * * * * * * * * * * * * * * * * * * * * * * * * * * *
C     STEP 4
C     U=((L)TRANSPOSE)INVERSE
C      WRITE U ON TAPE BY ROWS
      WRITE(ITAPE) (A(I),I=1,NMAX)
C     FINISHED WITH STEP 4
C* * * * * * * * * * * * * * * * * * * * * * * * * * * * * * * * * * * * * *
C      STEP 5
C      WRITE U ON TAPE BY COLUMNS STARTING WITH THE LAST COLUMN FIRST
C      PUT U (LAST COLUMN FIRST) INTO TEMP AND THEN WRITE ON TAPE
      IND=0
      DO 555 K=1,N
      J=N-K+1
      DO 550 I=1,J
      IND=IND+1
      MIJ=(M-I)*(I-1)/2+J
      TEMP(IND)=A(MIJ)
  550 CONTINUE
      WRITE(JTAPE) (TEMP(JJ),JJ=1,IND)
      IND=0
  555 CONTINUE
C     END OF STEP 5
C* * * * * * * * * * * * * * * * * * * * * * * * * * * * * * * * * * * * * *
C     STEP 6
C     FORM KU
C     READ K INTO CORE
C     READ U INTO CORE A COLUMN AT A TIME IN REVERSE ORDER
C     REPLACE K BY KU COLUMN BY COLUMN STARTING WITH THE LAST COLUMN
C     AND WORKING UP THE COLUMN
      READ(MTAPE) (A(I),I=1,NMAX)
      REWIND JTAPE
      DO 690 JJ=1,N
      J=N+1-JJ
      READ(JTAPE) (TEMP(II),II=1,J)
      DO 690 II=1,J
      I=J+1-II
      SUM=0.D0
      DO 650 K=I,I
      MK1=(M-K)*(K-1)/2+I
  650 SUM=SUM+A(MK1)*TEMP(K)
      IND=(M-I)*(I-1)/2+J
      IF(I.EQ.J) GO TO 680
```

```
      K1=(M-I)*(I-1)/2
      I=I+1
      DO 660 K=I,J
      K1K=K1+K
  660 SUM=SUM+A(K1K)*TEMP(K)
  680 CONTINUE
      A(IND)=SUM
  690 CONTINUE
C     END OF STEP 6
C* * * * * * * * * * * * * * * * * * * * * * * * * * * * * * * * * * * * * *
C     STEP 7
C      FORM((L)INVERSE)*KU
C      KU IS IN CORE
C      READ IN L COLUMN BY COLUMN AND CALCULATE ((L)INVERSE)*KU
C      ROW BY ROW
C     CALCULATE THE FIRST ROW
      REWIND NTAPE
      READ(NTAPE) TEMP(1)
      DO 710 I=1,N
  710 A(I)=A(I)/TEMP(1)
C     NOW CALCULATE THE REST OF THE ROWS
      IND=N
      DO 799 I=2,N
      READ (NTAPE) (TEMP(JJ),JJ=1,I)
      DO 799 J=I,N
      IND=IND+1
      JJ=I-1
      SUM=0.D0
      DO 750 K=1,JJ
      MK2=(M-K)*(K-1)/2+J
  750 SUM=SUM+TEMP(K)*A(MK2)
  799 A(IND)=(A(IND)-SUM)/TEMP(I)
C     STEP 7 IS COMPLETE
C* * * * * * * * * * * * * * * * * * * * * * * * * * * * * * * * * * * * * *
C     STEP 8
C     DETERMINE EIGENVALUES AND EIGENVECTORS OF THE NEW MATRIX
C      CHANGE THE SIGN OF A IN ORDER TO OBTAIN THE SMALLEST
C      EIGENVALUE FIRST
      DO 800 I=1,NMAX
  800 A(I)=-A(I)
      CALL BIGMAT(A,VALU,TEMP,B,C,D,E,IDUM,N,NEIG,NVEC,NTAPE)
C      CHANGE VALU BACK
      DO 850 I=1,NEIG
  850 VALU(I)=-VALU(I)
C     STEP 8 IS COMPLETE
C* * * * * * * * * * * * * * * * * * * * * * * * * * * * * * * * * * * * * *
C      STEP 9
C     CHANGE EIGENVECTORS BACK
C     READ U INTO CORE BY ROWS
C     READ UNCHANGED EIGENVECTORS INTO CORE ONE AT A TIME
C      CHANGE AND PRINT EIGENVECTORS
      IF(NVEC.EQ.0) GO TO 2000
      WRITE(OUT,1001)
```

```
      REWIND ITAPE
      READ(ITAPE) (A(I),I=1,NMAX)
      REWIND MTAPE
      DO 999 JJ=1,NVEC
      READ(MTAPE) (TEMP(I),I=1,N)
      IND=0
      DO 910 I=1,N
      SUM=0.D0
      DO 909 J=I,N
      IND=IND+1
  909 SUM=SUM+A(IND)*TEMP(J)
  910 TEMP(I)=SUM
C     NORMALIZE THE EIGENVECTOR
      SUM=TEMP(1)
      DO 939 II=1,N
      IF(ABS(SUM)-ABS(TEMP(II))) 938,939,939
  938 SUM=TEMP(II)
  939 CONTINUE
      IF(SUM) 941,947,940
  940 CONTINUE
      DO 941 II=1,N
      TEMP(II)=TEMP(II)/SUM
  941 CONTINUE
  947 CONTINUE
  999 WRITE(OUT,4000) JJ,VALU(JJ),(TEMP(I),I=1,N)
C     STEP 9 IS COMPLETE
C* * * * * * * * * * * * * * * * * * * * * * * * * * * * * * * * * * * * * *
      GO TO 2000
 4000 FORMAT (1H0,19H EIGENVECTOR NUMBER  I5/12X,17H CORRESPONDING TO
     1 1PE15.7/(1H 1P6E15.7))
 4001 FORMAT(1H1,38X,43HHERE ARE THE EIGENVALUES AND EIGENVECTORS   ///)
 4002 FORMAT(1H1,38X,27HTHE MASS MATRIX IS SINGULAR   ///)
 1999 WRITE(OUT,4002)
 2000 RETURN
      END
```

```
$      FORTRAN DECK
CHIGMAT
C PROG.AUTHORS M.ELSON AND R.E.FUNDERLIC.CENTRAL DATA PROCESSING.4.1.65 B
      SUBROUTINE HIGMAT(A,VALU,VALL,UPPERD,DIAG,V,T,INTER,NN,NEIG,NVEC,
     1MTAPE)
      DIMENSION A(1),VALU(1),VALL(1),UPPERD(1),DIAG(1),V(1),T(NN,3),
     1INTER(1)
      REWIND MTAPE
      NZ=0                                                              B
      N=NN                                                              B
      IF(N.LE.2)GO TO 49
      NP1=N+1                                                           B
      NM1=N-1                                                           B
      NM2=N-2                                                           B
      NT2P1=N*2+1                                                       B
      IX=0                                                              B
      DO 10 I=1,NM2                                                     B
      SIGMA2=0.                                                         B
      IP1=I+1                                                           B
      DO 1 J=IP1,N                                                      B
      IJ=IX+J                                                           B
    1 SIGMA2=SIGMA2+A(IJ)**2                                            B
      SIGMA=SQRT(SIGMA2)                                                B
      II=IX+I                                                           B
      DIAG(I)=A(II)                                                     B
      IIP1=IX+I+1                                                       B
      UPPERD(I)=-SIGN(SIGMA,A(IIP1))                                    B
      T(I,2)=SIGMA
      IF(ABS(SIGMA).GT.ABS(A(IIP1)))GO TO 2                             B
      UPPERD(I)=A(IIP1)                                                 B
      A(IIP1)=0.                                                        B
      GO TO 10                                                          B
    2 A(IIP1)=SQRT(1.+ABS(A(IIP1))/SIGMA)                               B
      SQTGAM=-SIGN(SIGMA*A(IIP1),UPPERD(I))                             B
      IP2=I+2                                                           B
      DO 3 J=IP2,N                                                      B
      IJ=IX+J                                                           B
    3 A(IJ)=A(IJ)/SQTGAM                                                B
      JK1=I*(2*N-I-1)/2                                                 B
      JX=JK1                                                            B
      IIX=JK1                                                           B
      DO 5 J=IP1,N                                                      B
      VALL(J)=0.
      JK=JK1+J                                                          B
      DO 4 K=IP1,J                                                      B
      IK=IX+K                                                           B
      VALL(J)=VALL(J)+A(JK)*A(IK)
    4 JK=JK+N-K                                                         B
      IF(J.EQ.N)GO TO 6                                                 B
      CALL LOOP1(J+2,NP1,VALL(J),A(JX),A(IX))
    5 JX=JX+N-J                                                         B
    6 DELGAM=0.                                                         B
      DO 7 J=IP1,N                                                      B
```

```
      IJ=IX+J
    7 DELGAM=DELGAM+A(IJ)*VALL(J)
      DGO2=.5*DELGAM
      DO 8 J=IP1,N
      IJ=IX+J
    8 T(J,1)=VALL(J)-DGO2*A(IJ)
      DO 9 II=IP1,N
      III=IIX+II
      CALL LOOP2(A(IIX),A(IX),T(NZ,1),T(II,1),A(III),II+1,NP1)
    9 IIX=IIX+N-II
   10 IX=IX+N-I
      M=N*(N+1)/2
      UPPERD(NM1)=A(M-1)
      T(NM1,2)=UPPERD(NM1)**2
      DIAG(NM1)=A(M-2)
      DIAG(N)=A(M)
      ENORM=AMAX1(ABS(DIAG)+ABS(UPPERD),ABS(DIAG(N))+ABS(UPPERD(NM1)))
      DO 11 I=2,NM1
      ENRTMP=ABS(DIAG(I))+ABS(UPPERD(I))+ABS(UPPERD(I-1))
   11 IF(ENRTMP.GT.ENORM)ENORM=ENRTMP
      DO 12 I=1,NEIG
      VALU(I)=ENORM
   12 VALL(I)=-ENORM
      DO 24 I=1,NEIG
   13 ROOT=.5*(VALU(I)+VALL(I))
      IF(ROOT.EQ.VALL(I).OR.ROOT.EQ.VALU(I))GO TO 24
      NAGREE=0
      PM2=0.
      PM1=1.
      DO 21 J=1,N
      IF(PM2.NE.0.)GO TO 15
   14 PM1=SIGN(1.,PM1)
      GO TO 17
   15 IF(PM1.NE.0.0) GO TO 17
   16 P=-SIGN(1.,PM2)
      PM2=0.
      IF(T(J-1,2)) 18,14,18
   17 P=DIAG(J)-ROOT-T(J-1,2)*PM2/PM1
      PM2=1.
   18 IF(P)21,19,20
   19 PM2=PM1
      IF(PM2)21,20,20
   20 NAGREE=NAGREE+1
   21 PM1=P
      DO 23 J=I,NEIG
      IF(J.LE.NAGREE)GO TO 22
      IF(VALU(J).LE.ROOT)GO TO 13
      VALU(J)=ROOT
      GO TO 23
   22 VALL(J)=ROOT
   23 CONTINUE
      GO TO 13
```

```
24 CONTINUE                                                          B
   IF(NVEC.EQ.0)GO TO 49                                             B
   EPSLON=ENORM*1.E-8                                                B
   COMPL1=COMPL(1)                                                   B
   DO 48 I=1,NVEC                                                    B
   DO 25 J=1,N                                                       B
   V(J)=1.                                                           B
   T(J,2)=DIAG(J)-VALU(I)                                            B
   IF(J.EQ.N)GO TO 26                                                B
   T(J,3)=UPPERD(J)                                                  B
25 T(J+1,1)=UPPERD(J)                                                B
26 T(N,3)=0.                                                         B
   DO 29 J=1,N                                                       B
   IF(ABS(T(J,2)).LT.1.E-17)T(J,2)=EPSLON                            B
   T(J,1)=T(J,2)                                                     B
   T(J,2)=T(J,3)                                                     B
   T(J,3)=0.                                                         B
   IF(J.EQ.N)GO TO 30                                                B
   INTER(J)=0                                                        B
   JP1=J+1                                                           B
   IF(ABS(T(JP1,1)).LE.ABS(T(J,1)))GO TO 28                          B
   INTER(J)=1                                                        B
   DO 27 K=1,3                                                       B
   TEMP=T(J,K)                                                       B
   T(J,K)=T(JP1,K)                                                   B
27 T(JP1,K)=TEMP                                                     B
28 TMULTP=T(JP1,1)/T(J,1)                                            B
   VALL(J)=OR(INTER(J),AND(TMULTP,COMPL1))                           B
   T(JP1,2)=T(JP1,2)-TMULTP*T(J,2)                                   B
29 T(JP1,3)=T(JP1,3)-TMULTP*T(J,3)                                   B
30 ITER=1                                                            B
31 DO 32 J=1,N                                                       B
   L=N+1-J                                                           B
32 V(L)=(V(L)-T(L,2)*V(L+1)-T(L,3)*V(L+2))/T(L,1)                    B
   VNORM=0.                                                          B
   DO 33 L=1,N                                                       B
33 VNORM=VNORM+V(L)**2                                               B
   VNORM=SQRT(VNORM)                                                 B
   DO 34 J=1,N                                                       B
34 V(J)=V(J)/VNORM                                                   B
   IF(ITER.EQ.2)GO TO 36                                             B
   ITER=2                                                            B
   DO 35 L=2,N                                                       B
   LM1=L-1                                                           B
   TRY=VALL(LM1)                                                     B
   IF(AND(TRY,1).EQ.0) GO TO 35                                      B
   VTEMP=V(LM1)                                                      B
   V(LM1)=V(L)                                                       B
   V(L)=VTEMP                                                        B
35 V(L)=V(L)-VALL(LM1)*V(LM1)                                        B
   GO TO 31                                                          B
36 IF(VNORM.EQ.0.)V(I)=1.                                            B
   IIX=(N*N-N-6)/2                                                   B
```

```
      DO 37 KK=1,NM2
      IIP1=N-KK
      UTV=0.
      CALL LOOP3(UTV,A(IIX),V(NZ),IIP1+1,NP1)
      CALL LOOP4(A(IIX),V(NZ),NP1,IIP1+1,UTV)
   37 IIX=IIX+IIP1-N-2
      WRITE(MTAPE) (V(ICH),ICH=1,N)
   48 CONTINUE
   49 RETURN
      END
```

```
$       FORTRAN DECK
CLOOP1
      SUBROUTINE LOOP1(JP2,NP1,SGAMPJ,AJX,AIX)                          B
      DIMENSION AJX(1), AIX(1)                                          B
      DO 1 L=JP2,NP1                                                    B
    1 SGAMPJ=SGAMPJ+AJX(L)*AIX(L)                                       B
      RETURN                                                            B
      END
$       FORTRAN DECK
CLOOP2
      SUBROUTINE LOOP2(AIIX,AIX,S,SI,AIII,IP1,NP1)                      B
      DIMENSION AIIX(1),AIX(1),S(1)                                     B
      DO 2 JJ=IP1,NP1                                                   B
    2 AIIX(JJ)=AIIX(JJ)-AIII*S(JJ)-SI*AIX(JJ)                           B
      RETURN                                                            B
      END
$       FORTRAN DECK
CLOOP3
      SUBROUTINE LOOP3(UTV,AIIX,V,IIP2,NP1)                             B
      DIMENSION AIIX(1), V(1)                                           B
      DO 3 J=IIP2,NP1                                                   B
    3 UTV=UTV+AIIX(J)*V(J)                                              B
      RETURN                                                            B
      END
$       FORTRAN DECK
CLOOP4
      SUBROUTINE LOOP4(AIIX,V,NP1,IIP2,UTV)                             B
      DIMENSION AIIX(1),V(1)                                            B
      DO 4 K=IIP2,NP1                                                   B
    4 V(K)=V(K)-AIIX(K)*UTV                                             B
      RETURN                                                            B
      END
```

APPENDIX C

Program FLUENC FLOW CHART

MAIN PROGRAM FLUENC-FOR GENERATING STIFFNESS,FLEXIBILITY AND MASS MATRICES FROM PLANE GRID BEAM AND TRIANG. PLATE ELEMENTS

D I M E N S I O N E D V A R I A B L E S

SYMBOL	STORAGES	SYMBOL	STORAGES	SYMBOL	STORAGES	SYMBOL	STORAGES	SYMBOL	STORAGES
TITLE	24	YM	10	PR	10	GE	10	DENS	10
X	50	Y	50	NR1	50	NR2	50	NR3	50
N1	50	N2	50	N3	50	NOSC	9	DCS	2
STN	6,6	SNN	6,6	PLTK	9,9	PLTM	9,9	SSTF	11325
SM	11322	RSMASS	50,A(1	25),VA	LU(9	TEMP	50	B	150
C	100	DUM3	150	F	150,3	IDUM4	50	JMASS	50

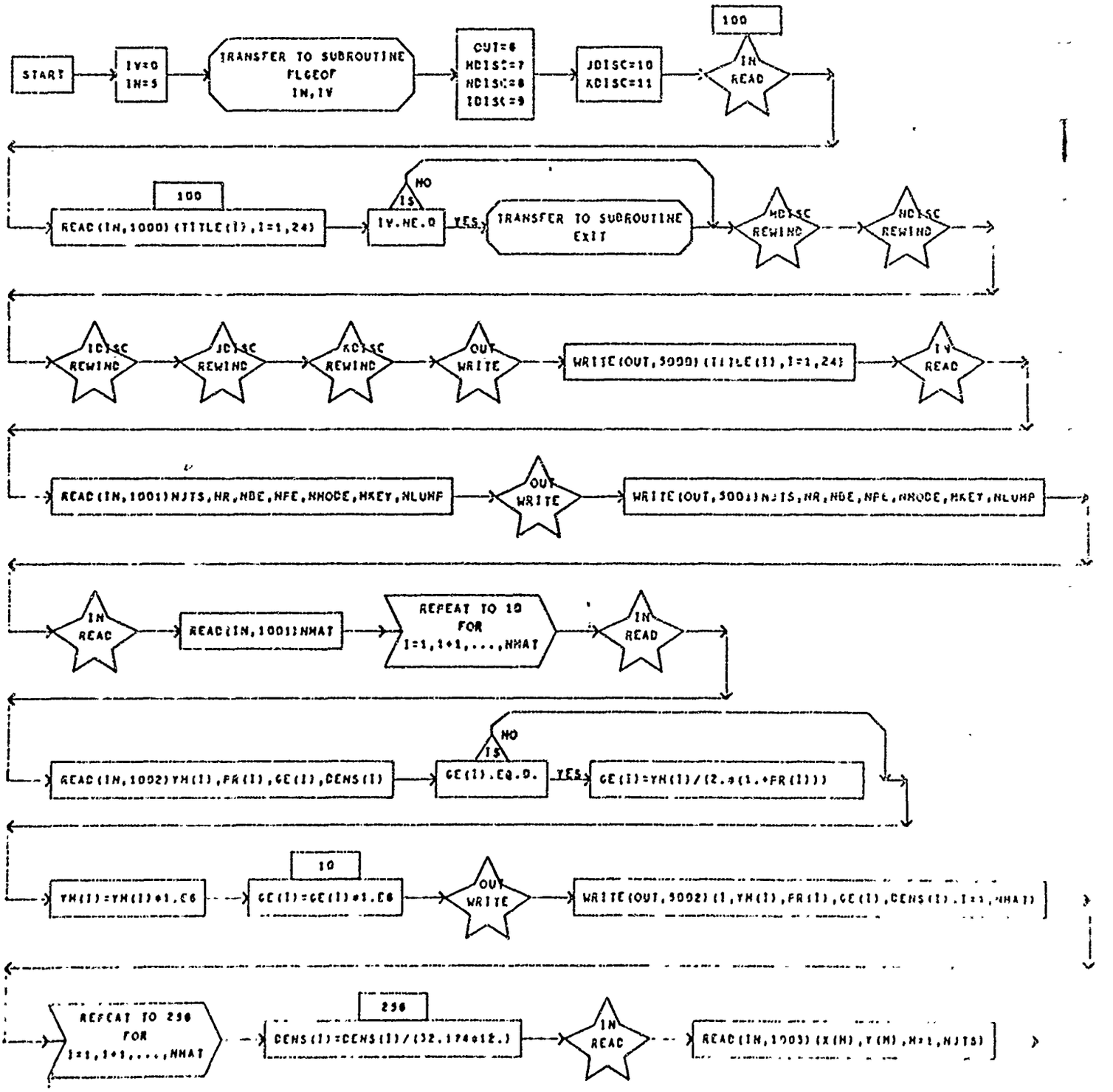
START
IV=0
IN=5
TRANSFER TO SUBROUTINE
FLGEOF
IN,IV
OUT=6
NDISC=7
NDISC=8
IDISC=9
JDISC=10
KDISC=11
100
IN
READ
100
READ(IN,1000)(TITLE(I),I=1,24)
IS
IV.NE.0
NO
YES
TRANSFER TO SUBROUTINE
EXIT
NDISC
REWIND
NDISC
REWIND
IDISC
REWIND
JDISC
REWIND
KDISC
REWIND
OUT
WRITE
WRITE(OUT,5000)(TITLE(I),I=1,24)
IV
READ
READ(IN,1001)NJTS,NR,NBE,NFE,NNODE,NKEY,NLUMP
OUT
WRITE
WRITE(OUT,5001)NJTS,NR,NBE,NFE,NNODE,NKEY,NLUMP
IN
READ
READ(IN,1001)NMAT
REPEAT TO 10
FOR
I=1,1+1,...,NMAT
IN
READ
READ(IN,1002)YM(I),PR(I),GE(I),DENS(I)
IS
GE(I).EQ.0.
NO
YES
GE(I)=YM(I)/(2.*(1.+PR(I)))
YM(I)=YM(I)*1.E6
10
GE(I)=GE(I)*1.E6
OUT
WRITE
WRITE(OUT,5002)(I,YM(I),PR(I),GE(I),DENS(I),I=1,NMAT)
REPEAT TO 250
FOR
I=1,1+1,...,NMAT
250
DENS(I)=DENS(I)/(32.174*12.)
IN
READ
READ(IN,1003)(X(M),Y(M),M=1,NJTS)

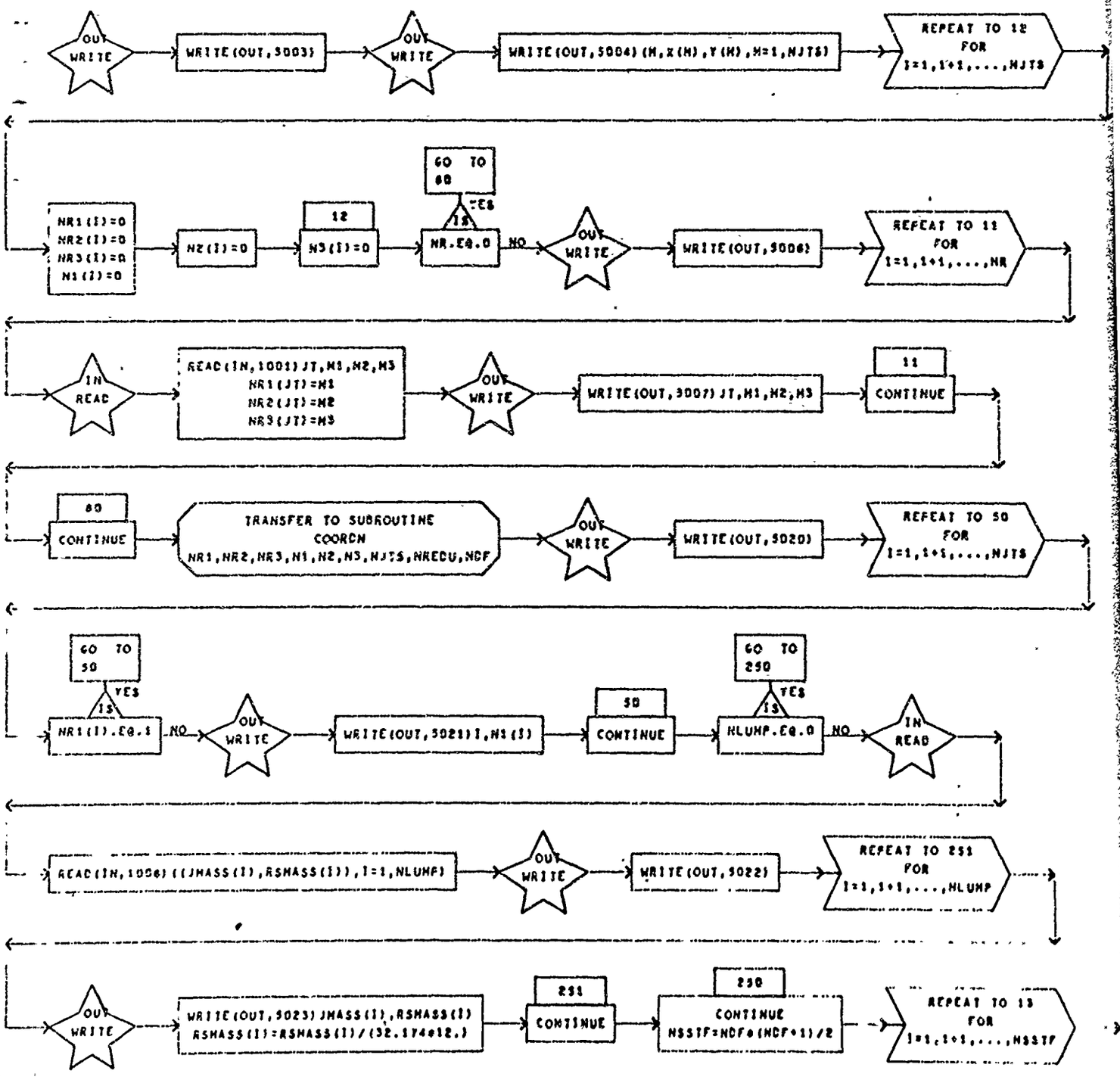
OUT WRITE
WRITE(OUT,3003)
OUT WRITE
WRITE(OUT,3004)(M,X(M),Y(M),M=1,NJTS)
REPEAT TO 12 FOR I=1,1+1,...,NJTS
NR1(I)=0
NR2(I)=0
NR3(I)=0
N1(I)=0
N2(I)=0
12
N3(I)=0
GO TO 60
IS =ES
NR.EQ.0
NO
OUT WRITE
WRITE(OUT,3006)
REPEAT TO 11 FOR I=1,1+1,...,NR
IN READ
READ(IN,1001)JT,M1,M2,M3
NR1(JT)=M1
NR2(JT)=M2
NR3(JT)=M3
OUT WRITE
WRITE(OUT,3007)JT,M1,M2,M3
11
CONTINUE
60
CONTINUE
TRANSFER TO SUBROUTINE COORDN
NR1,NR2,NR3,N1,N2,N3,NJTS,NRECU,NDF
OUT WRITE
WRITE(OUT,3020)
REPEAT TO 50 FOR I=1,1+1,...,NJTS
GO TO 50
IS YES
NR1(I).EQ.1
NO
OUT WRITE
WRITE(OUT,3021)I,N1(I)
50
CONTINUE
GO TO 250
IS YES
NLUMP.EQ.0
NO
IN READ
READ(IN,1006)((JMASS(I),RSMASS(I)),I=1,NLUMP)
OUT WRITE
WRITE(OUT,3022)
REPEAT TO 251 FOR I=1,1+1,...,NLUMP
OUT WRITE
WRITE(OUT,3023)JMASS(I),RSMASS(I)
RSMASS(I)=RSMASS(I)/(32.174*12.)
251
CONTINUE
250
CONTINUE
NSSTF=NDF*(NDF+1)/2
REPEAT TO 13 FOR I=1,1+1,...,NSSTF

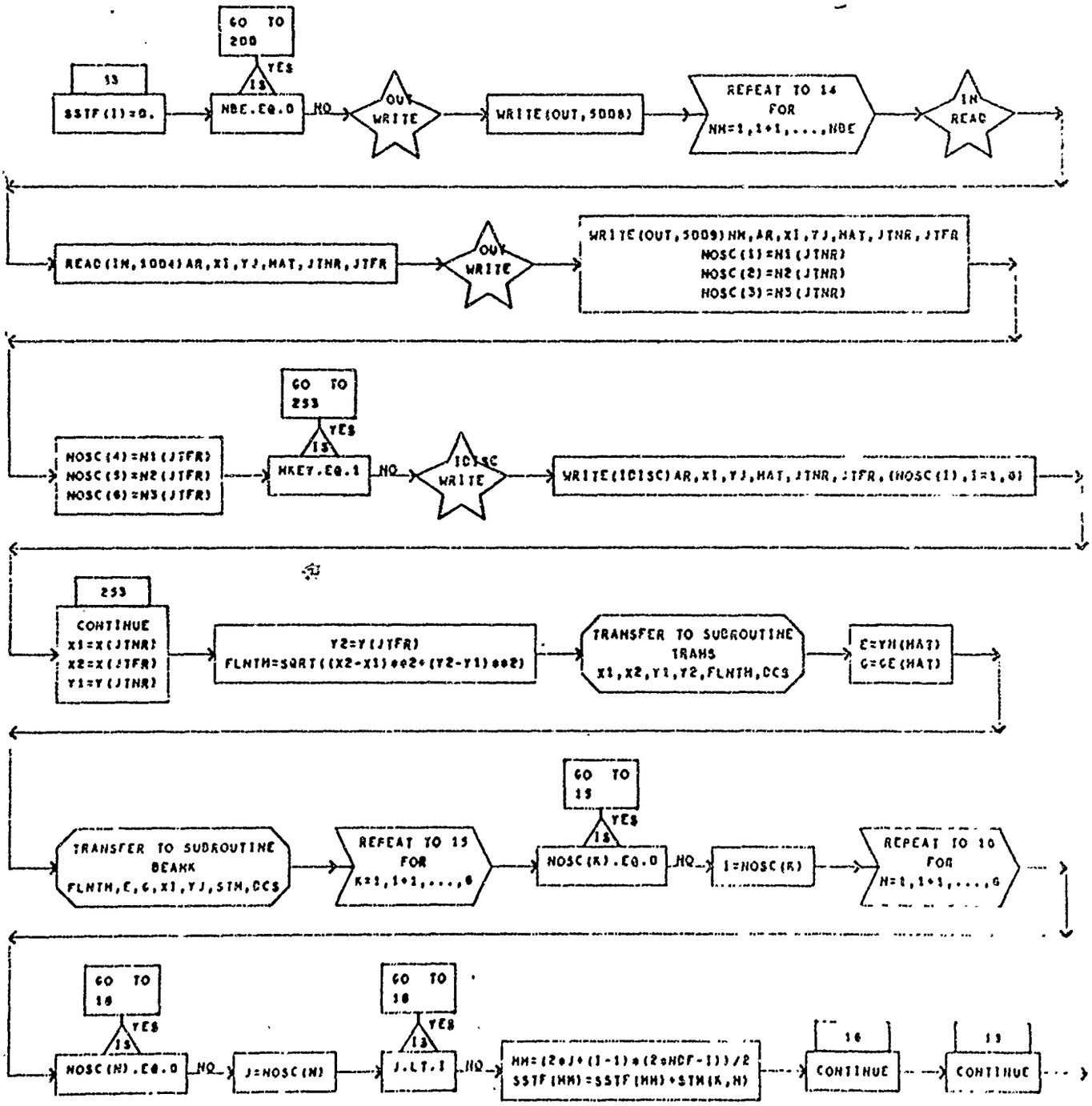
13
SSTF(I)=0.
NBE.EQ.0
YES
GO TO 200
NO
OUT WRITE
WRITE(OUT,5008)
REPEAT TO 14 FOR NM=1,1+1,...,NBE
IN READ
READ(IN,1004)AR,XI,YJ,MAT,JTNR,JTFR
OUT WRITE
WRITE(OUT,5009)NM,AR,XI,YJ,MAT,JTNR,JTFR
NOSC(1)=N1(JTNR)
NOSC(2)=N2(JTNR)
NOSC(3)=N3(JTNR)
NOSC(4)=N1(JTFR)
NOSC(5)=N2(JTFR)
NOSC(6)=N3(JTFR)
GO TO 253
MKEY.EQ.1
IOISC WRITE
WRITE(IOISC)AR,XI,YJ,MAT,JTNR,JTFR,(NOSC(I),I=1,6)
253
CONTINUE
X1=X(JTNR)
X2=X(JTFR)
Y1=Y(JTNR)
Y2=Y(JTFR)
FLNTH=SQRT((X2-X1)**2+(Y2-Y1)**2)
TRANSFER TO SUBROUTINE TRAHS
X1,X2,Y1,Y2,FLNTH,DCS
E=YM(MAT)
G=GE(MAT)
TRANSFER TO SUBROUTINE BEAKK
FLNTH,E,G,XI,YJ,STM,DCS
REPEAT TO 15 FOR K=1,1+1,...,6
GO TO 15
NOSC(K).EQ.0
I=NOSC(K)
REPEAT TO 16 FOR N=1,1+1,...,6
GO TO 18
NOSC(N).EQ.0
J=NOSC(N)
GO TO 18
J.LT.I
MM=(2*J+(I-1)*(2*NDF-I))/2
SSTF(MM)=SSTF(MM)+STM(K,N)
16
CONTINUE
15
CONTINUE

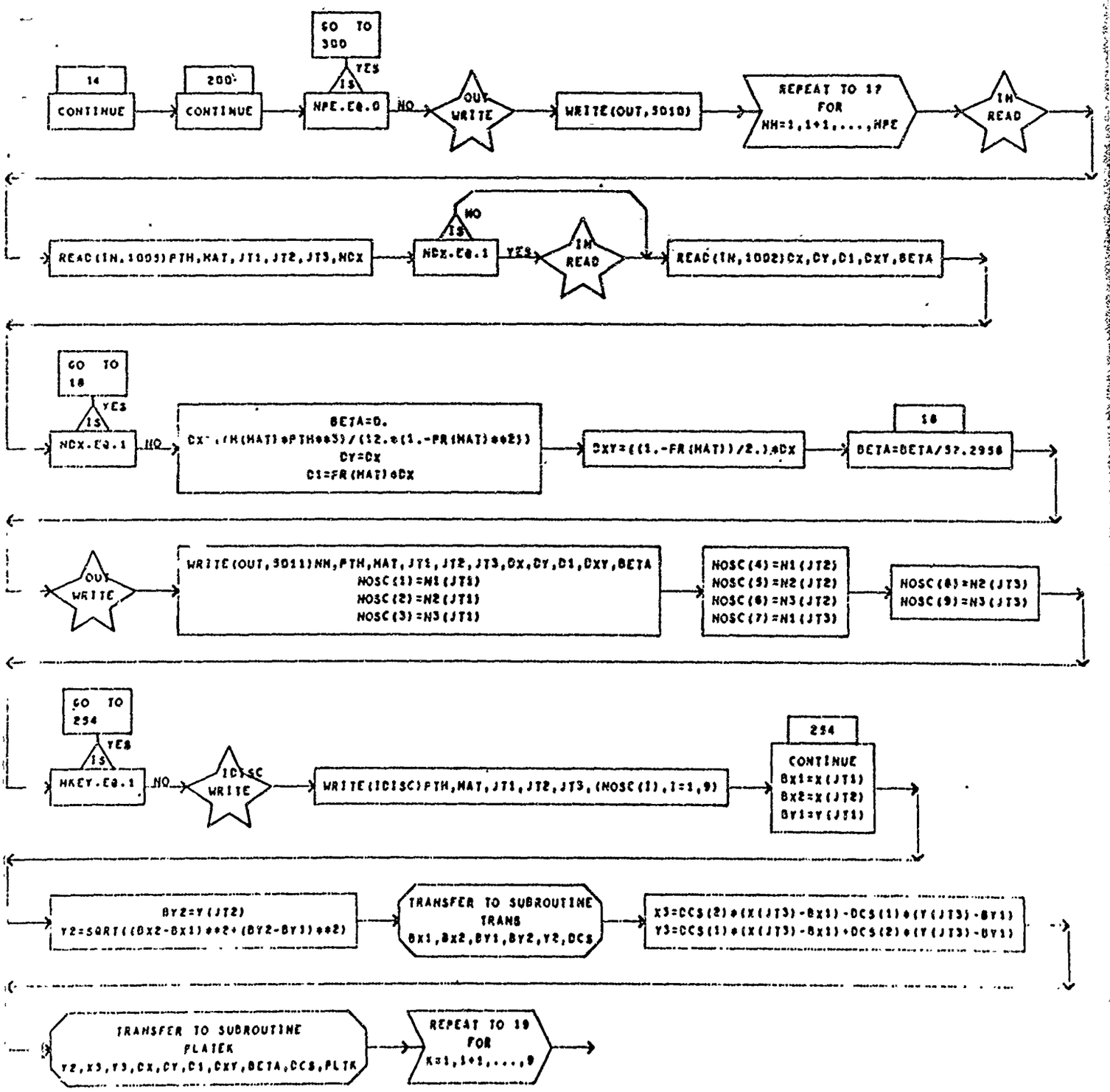
14
CONTINUE
200
CONTINUE
GO TO 300
IS
NPE.EQ.0
YES
NO
OUT WRITE
WRITE(OUT,5010)
REPEAT TO 17 FOR NH=1,1+1,...,NPE
IN READ
READ(IN,1005)PTH,HAT,JT1,JT2,JT3,NCX
NCX.EQ.1
NO
YES
IN READ
READ(IN,1002)CX,CY,C1,CXY,BETA
GO TO 18
IS
NCX.EQ.1
NO
YES
BETA=0.
CX=(FR(HAT)*PTH**3)/(12.*(1.-FR(HAT)**2))
CY=CX
C1=FR(HAT)*CX
CXY=((1.-FR(HAT))/2.)*CX
18
BETA=BETA/57.2958
OUT WRITE
WRITE(OUT,5011)NH,PTH,HAT,JT1,JT2,JT3,CX,CY,C1,CXY,BETA
NOSC(1)=N1(JT1)
NOSC(2)=N2(JT1)
NOSC(3)=N3(JT1)
NOSC(4)=N1(JT2)
NOSC(5)=N2(JT2)
NOSC(6)=N3(JT2)
NOSC(7)=N1(JT3)
NOSC(8)=N2(JT3)
NOSC(9)=N3(JT3)
GO TO 254
IS
NKEY.EQ.1
NO
ICISC WRITE
WRITE(ICISC)PTH,MAT,JT1,JT2,JT3,(NOSC(I),I=1,9)
254
CONTINUE
BX1=X(JT1)
BX2=X(JT2)
BY1=Y(JT1)
BY2=Y(JT2)
Y2=SQRT((BX2-BX1)**2+(BY2-BY1)**2)
TRANSFER TO SUBROUTINE TRANS
BX1,BX2,BY1,BY2,Y2,DCS
X3=DCS(2)*(X(JT3)-BX1)-DCS(1)*(Y(JT3)-BY1)
Y3=DCS(1)*(X(JT3)-BX1)+DCS(2)*(Y(JT3)-BY1)
TRANSFER TO SUBROUTINE PLATEK
Y2,X3,Y3,CX,CY,C1,CXY,BETA,DCS,PLTK
REPEAT TO 19 FOR K=1,1+1,...,9

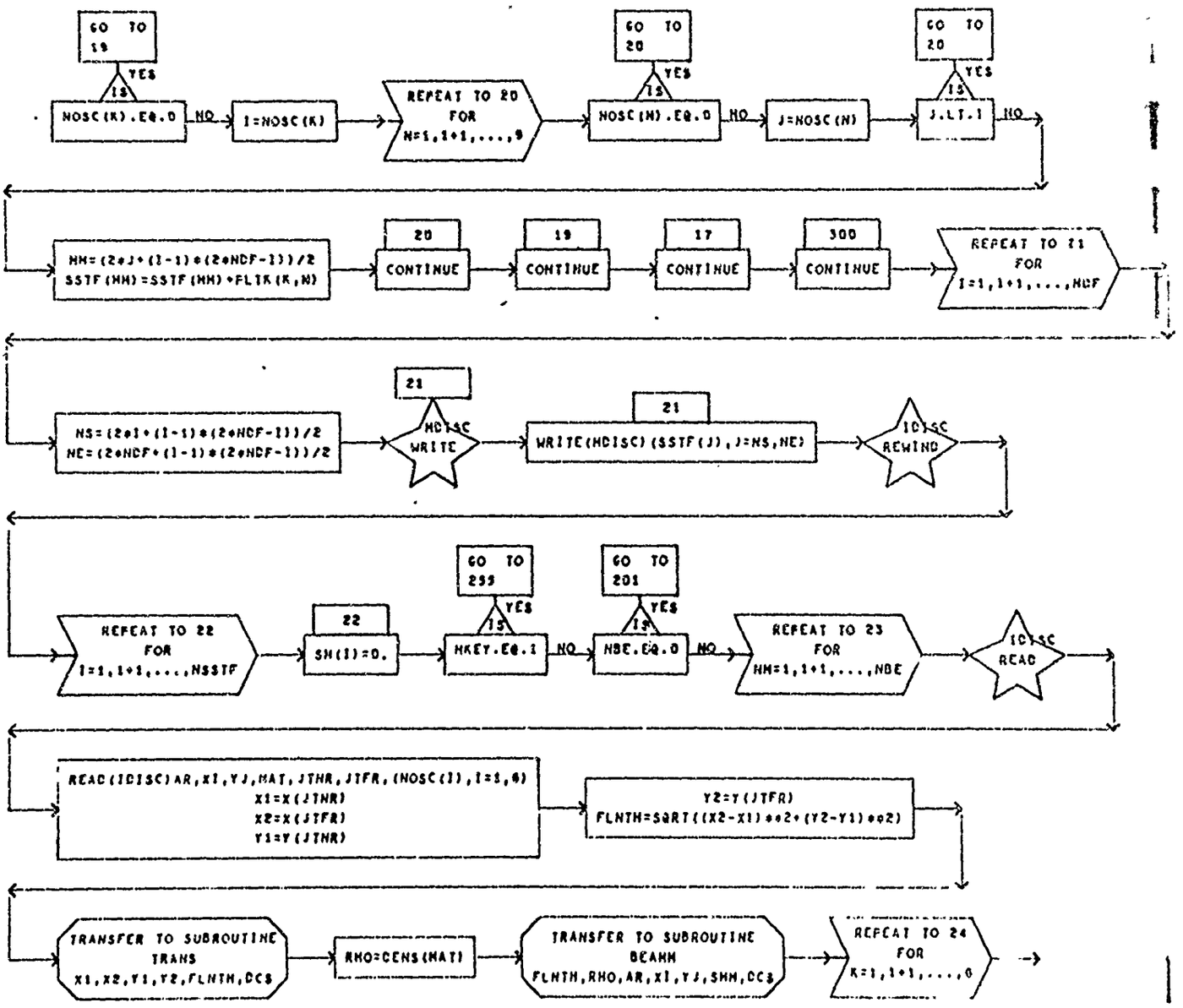
GO TO 19
IS
YES
NOSC(K).EQ.0
NO
I=NOSC(K)
REPEAT TO 20 FOR N=1,1+1,...,9
GO TO 20
IS
YES
NOSC(N).EQ.0
NO
J=NOSC(N)
GO TO 20
IS
YES
J.LT.1
NO
MM=(2*J+(I-1)*(2*NDF-1))/2
SSTF(MM)=SSTF(MM)+FLTK(K,N)
20
CONTINUE
19
CONTINUE
17
CONTINUE
300
CONTINUE
REPEAT TO 21 FOR I=1,1+1,...,NDF
NS=(2*I+(I-1)*(2*NDF-1))/2
NE=(2*NDF+(I-1)*(2*NDF-1))/2
21
HDISC WRITE
21
WRITE(HDISC)(SSTF(J),J=NS,NE)
IDISC REWIND
REPEAT TO 22 FOR I=1,1+1,...,NSSTF
22
SH(I)=0.
GO TO 295
IS
YES
HKEY.EQ.1
NO
GO TO 201
IS
YES
NBE.EQ.0
NO
REPEAT TO 23 FOR MM=1,1+1,...,NBE
IDISC READ
READ(IDISC)AR,XI,YJ,MAT,JTHR,JTFR,(NOSC(I),I=1,6)
X1=X(JTHR)
X2=X(JTFR)
Y1=Y(JTHR)
Y2=Y(JTFR)
FLNTH=SQRT((X2-X1)**2+(Y2-Y1)**2)
TRANSFER TO SUBROUTINE TRANS
X1,X2,Y1,Y2,FLNTH,DCS
RHO=DENS(MAT)
TRANSFER TO SUBROUTINE BEAMM
FLNTH,RHO,AR,XI,YJ,SHM,DCS
REPEAT TO 24 FOR K=1,1+1,...,6

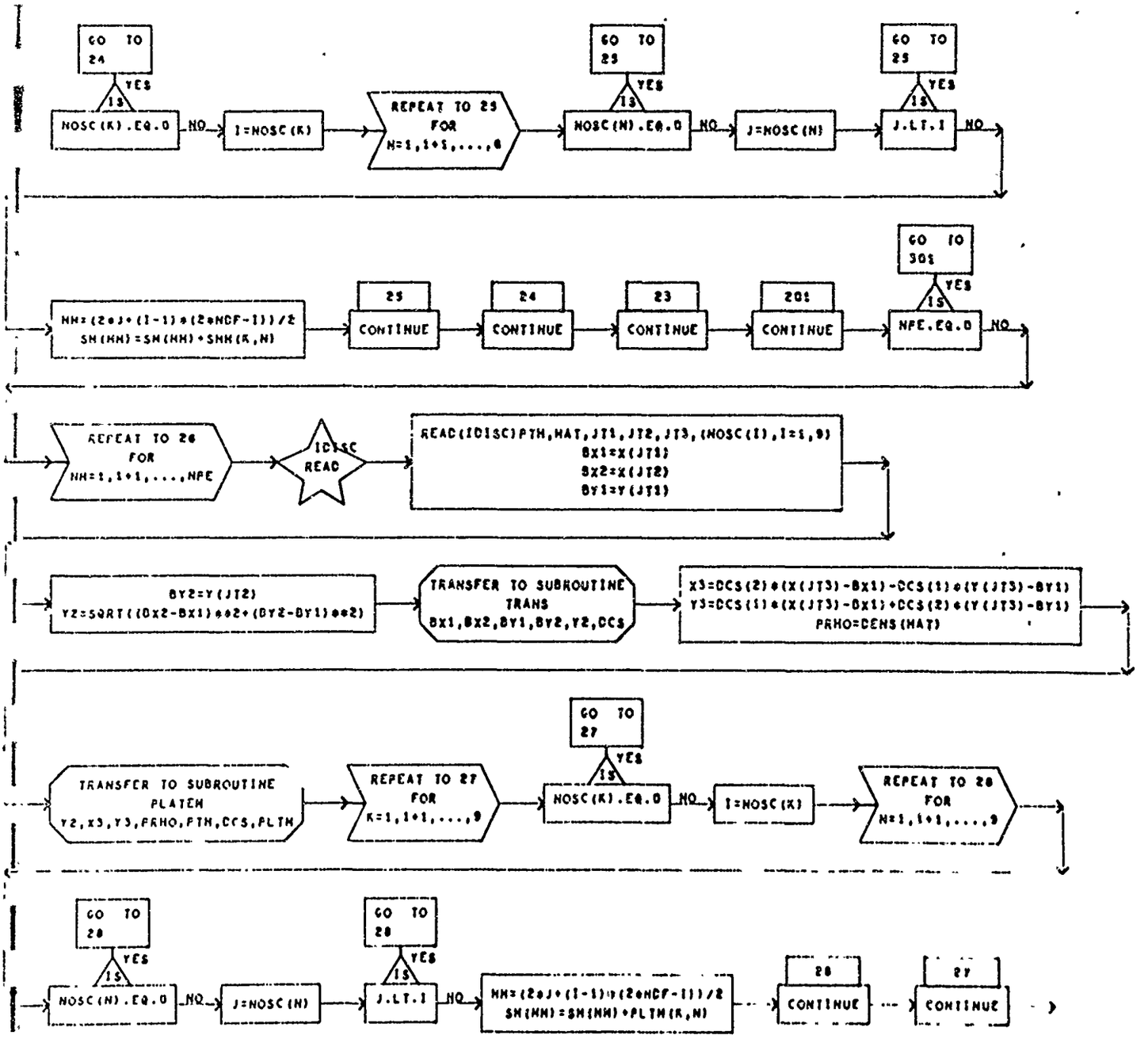
GO TO 24
IS
YES
NOSC(K).EQ.0
NO
I=NOSC(K)
REPEAT TO 25 FOR N=1,1+1,...,8
GO TO 25
IS
YES
NOSC(N).EQ.0
NO
J=NOSC(N)
GO TO 25
IS
YES
J.LT.I
NO
NH=(2*J+(I-1)*(2*NCF-I))/2
SM(NH)=SM(NH)+SNK(K,N)
25
CONTINUE
24
CONTINUE
23
CONTINUE
201
CONTINUE
GO TO 301
IS
YES
NPE.EQ.0
NO
REPEAT TO 26 FOR NN=1,1+1,...,NPE
IDISC READ
READ(IDISC)PTH,HAT,JT1,JT2,JT3,(NOSC(I),I=1,9)
BX1=X(JT1)
BX2=X(JT2)
BY1=Y(JT1)
BY2=Y(JT2)
Y2=SQRT((BX2-BX1)**2+(BY2-BY1)**2)
TRANSFER TO SUBROUTINE TRANS
BX1,BX2,BY1,BY2,Y2,CCS
X3=CCS(2)*(X(JT3)-BX1)-CCS(1)*(Y(JT3)-BY1)
Y3=CCS(1)*(X(JT3)-BX1)+CCS(2)*(Y(JT3)-BY1)
PRHO=DENS(HAT)
TRANSFER TO SUBROUTINE PLATEM
Y2,X3,Y3,PRHO,PTH,CCS,PLTH
REPEAT TO 27 FOR K=1,1+1,...,9
GO TO 27
IS
YES
NOSC(K).EQ.0
NO
I=NOSC(K)
REPEAT TO 28 FOR N=1,1+1,...,9
GO TO 28
IS
YES
NOSC(N).EQ.0
NO
J=NOSC(N)
GO TO 28
IS
YES
J.LT.I
NO
NH=(2*J+(I-1)*(2*NCF-I))/2
SM(NH)=SM(NH)+PLTH(K,N)
28
CONTINUE
27
CONTINUE

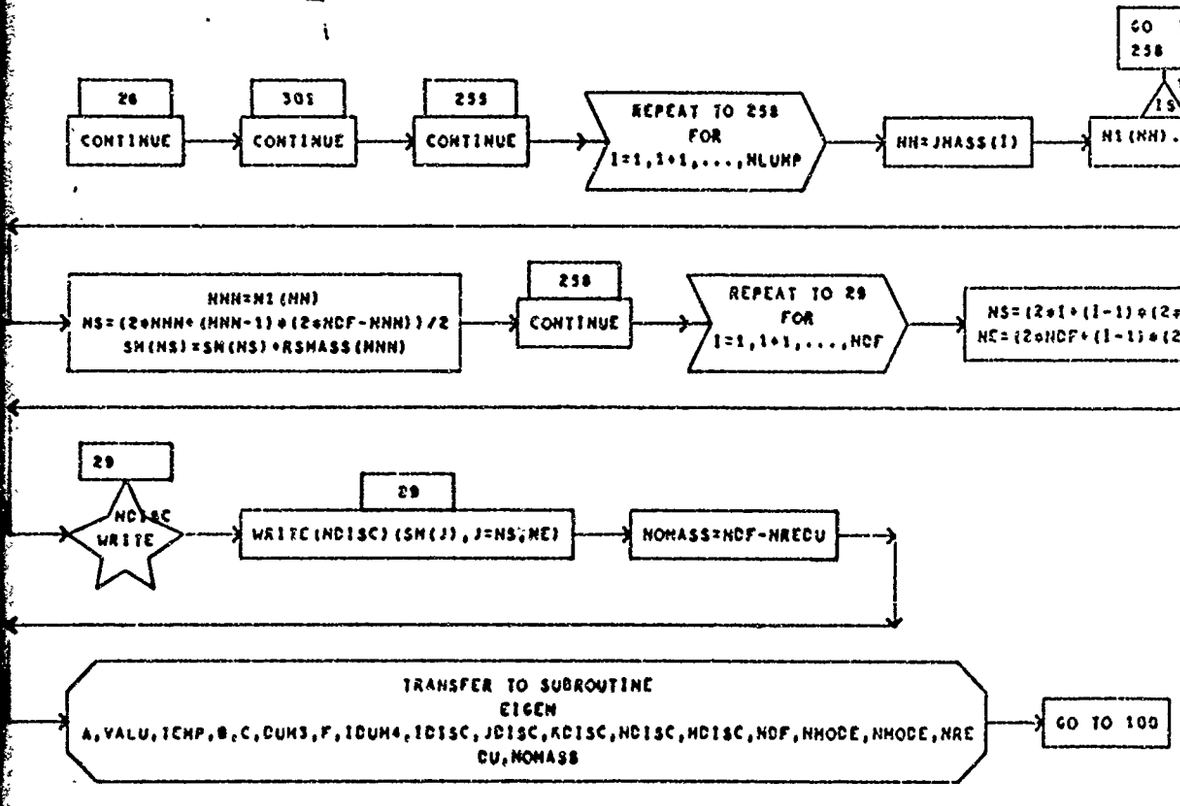
26
CONTINUE
301
CONTINUE
255
CONTINUE
REPEAT TO 258
FOR
I=1,1+1,...,NLUMP
NN=JNASS(I)
N1(NN).EQ.0
IS
YES
GO TO
258
TO
NNN=N1(NN)
NS=(2*NNN*(NNN-1)*(2*NDF-NNN))/2
SM(NS)=SM(NS)+RSMASS(NNN)
258
CONTINUE
REPEAT TO 29
FOR
I=1,1+1,...,NDF
NS=(2*I+(I-1)*(2*NDF-I))/2
NE=(2*NDF+(I-1)*(2*NDF-I))/2
29
NDISC
WRITE
29
WRITE(NDISC)(SM(J),J=NS,NE)
NOMASS=NDF-NRECU
TRANSFER TO SUBROUTINE
EIGEN
A,VALU,ICHP,B,C,DUM3,F,IDUM4,IDISC,JDISC,KDISC,NDISC,MDISC,NDF,NNODE,NNODE,NRE
CU,NOMASS
GO TO 100

BEAMK PLANE GRID BEAM ELEMENT STIFFNESS MATRIX IN SYSTEM COORDS.

FL = BEAM LENGTH

E = YOUNG'S MODULUS

G = MODULUS OF RIGIDITY

XI = AREA MOMENT OF INERTIA

YJ = EFFECTIVE TORSIONAL MOMENT OF INERTIA

STH = STIFFNESS MATRIX

DCS = DIRECTION COSINES

D I M E N S I O N E D V A R I A B L E S

SYMBOL	STORAGES	SYMBOL	STORAGES	SYMBOL	STORAGES	SYMBOL	STORAGES	SYMBOL	STORAGES
STH	6,6	DCS	2						

SUBROUTINE BEAMK(FL,E,G,XI,YJ,STH,DCS) PAGE 1

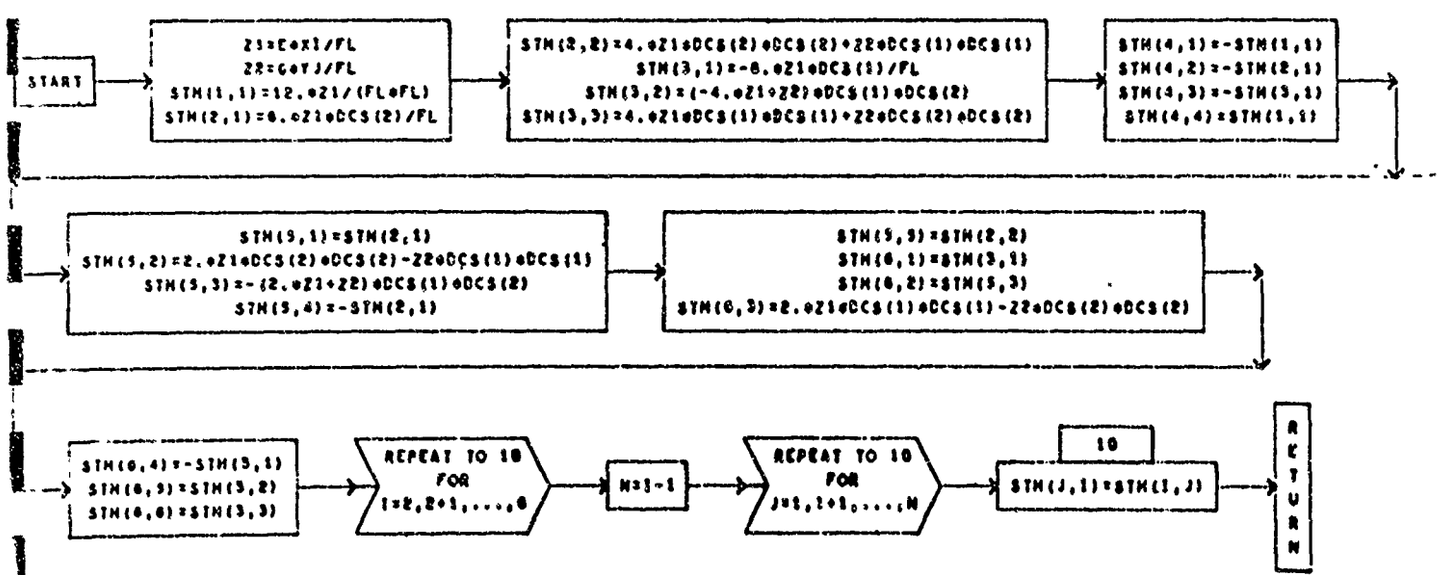

DINMTM

THIS SUBROUTINE DETERMINES THE DOUBLE INTEGRAL MATRIX FOR

THE TRIANGULAR PLATE M MATRIX - PRZEMIENIECKI, PAGE 304

Y2,Y3,Y3 = COORDS. OF PLATE CORNERS IN LOCAL COORDINATES

PRHO = DENSITY

PTH = PLATE THICKNESS

P = DOUBLE INTEGRAL MATRIX

DIMENSIONED VARIABLES

SYMBOL	STORAGES	SYMBOL	STORAGES	SYMBOL	STORAGES	SYMBOL	STORAGES	SYMBOL	STORAGE
P	9,9								

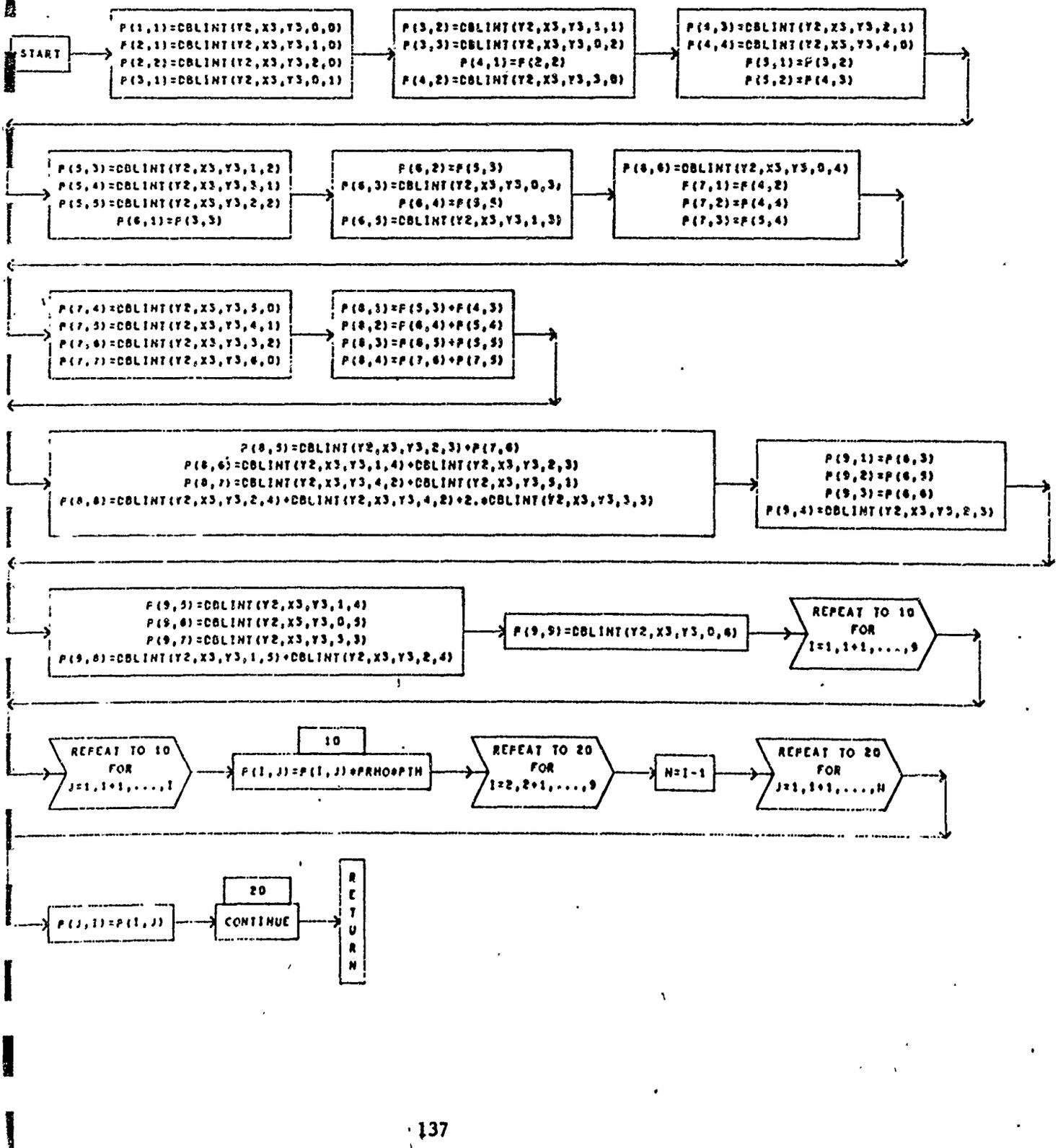
START
P(1,1)=CBLINT(Y2,X3,Y3,0,0)
P(2,1)=CBLINT(Y2,X3,Y3,1,0)
P(2,2)=CBLINT(Y2,X3,Y3,2,0)
P(3,1)=CBLINT(Y2,X3,Y3,0,1)
P(3,2)=CBLINT(Y2,X3,Y3,1,1)
P(3,3)=CBLINT(Y2,X3,Y3,0,2)
P(4,1)=P(2,2)
P(4,2)=CBLINT(Y2,X3,Y3,3,0)
P(4,3)=CBLINT(Y2,X3,Y3,2,1)
P(4,4)=CBLINT(Y2,X3,Y3,4,0)
P(5,1)=P(3,2)
P(5,2)=P(4,3)
P(5,3)=CBLINT(Y2,X3,Y3,1,2)
P(5,4)=CBLINT(Y2,X3,Y3,3,1)
P(5,5)=CBLINT(Y2,X3,Y3,2,2)
P(6,1)=P(3,3)
P(6,2)=P(5,3)
P(6,3)=CBLINT(Y2,X3,Y3,0,3)
P(6,4)=P(5,5)
P(6,5)=CBLINT(Y2,X3,Y3,1,3)
P(6,6)=CBLINT(Y2,X3,Y3,0,4)
P(7,1)=P(4,2)
P(7,2)=P(4,4)
P(7,3)=P(5,4)
P(7,4)=CBLINT(Y2,X3,Y3,3,0)
P(7,5)=CBLINT(Y2,X3,Y3,4,1)
P(7,6)=CBLINT(Y2,X3,Y3,3,2)
P(7,7)=CBLINT(Y2,X3,Y3,4,0)
P(8,3)=P(5,3)+P(4,3)
P(8,2)=P(6,4)+P(5,4)
P(8,3)=P(6,5)+P(5,5)
P(8,4)=P(7,6)+P(7,5)
P(8,5)=CBLINT(Y2,X3,Y3,2,3)+P(7,6)
P(8,6)=CBLINT(Y2,X3,Y3,1,4)+CBLINT(Y2,X3,Y3,2,3)
P(8,7)=CBLINT(Y2,X3,Y3,4,2)+CBLINT(Y2,X3,Y3,5,1)
P(8,8)=CBLINT(Y2,X3,Y3,2,4)+CBLINT(Y2,X3,Y3,4,2)+2.*CBLINT(Y2,X3,Y3,3,3)
P(9,1)=P(6,3)
P(9,2)=P(6,5)
P(9,3)=P(6,6)
P(9,4)=CBLINT(Y2,X3,Y3,2,3)
P(9,5)=CBLINT(Y2,X3,Y3,1,4)
P(9,6)=CBLINT(Y2,X3,Y3,0,5)
P(9,7)=CBLINT(Y2,X3,Y3,3,3)
P(9,8)=CBLINT(Y2,X3,Y3,1,5)+CBLINT(Y2,X3,Y3,2,4)
P(9,9)=CBLINT(Y2,X3,Y3,0,6)
REPEAT TO 10
FOR
I=1,1+1,...,9
REPEAT TO 10
FOR
J=1,1+1,...,I
10
P(I,J)=P(I,J)*PRHO*PTH
REPEAT TO 20
FOR
I=2,2+1,...,9
N=I-1
REPEAT TO 20
FOR
J=1,1+1,...,N
P(J,I)=P(I,J)
20
CONTINUE
RETURN

MINV - MATRIX INVERSION SUBROUTINE

A = MATRIX TO BE INVERTED

U = INVERTED MATRIX

NN = ORDER OF MATRIX (.LE.9)

DIMENSIONED VARIABLES

SYMBOL	STORAGES	SYMBOL	STORAGES	SYMBOL	STORAGES	SYMBOL	STORAGES	SYMBOL	STORAGES
A	9,9	U	9,9						

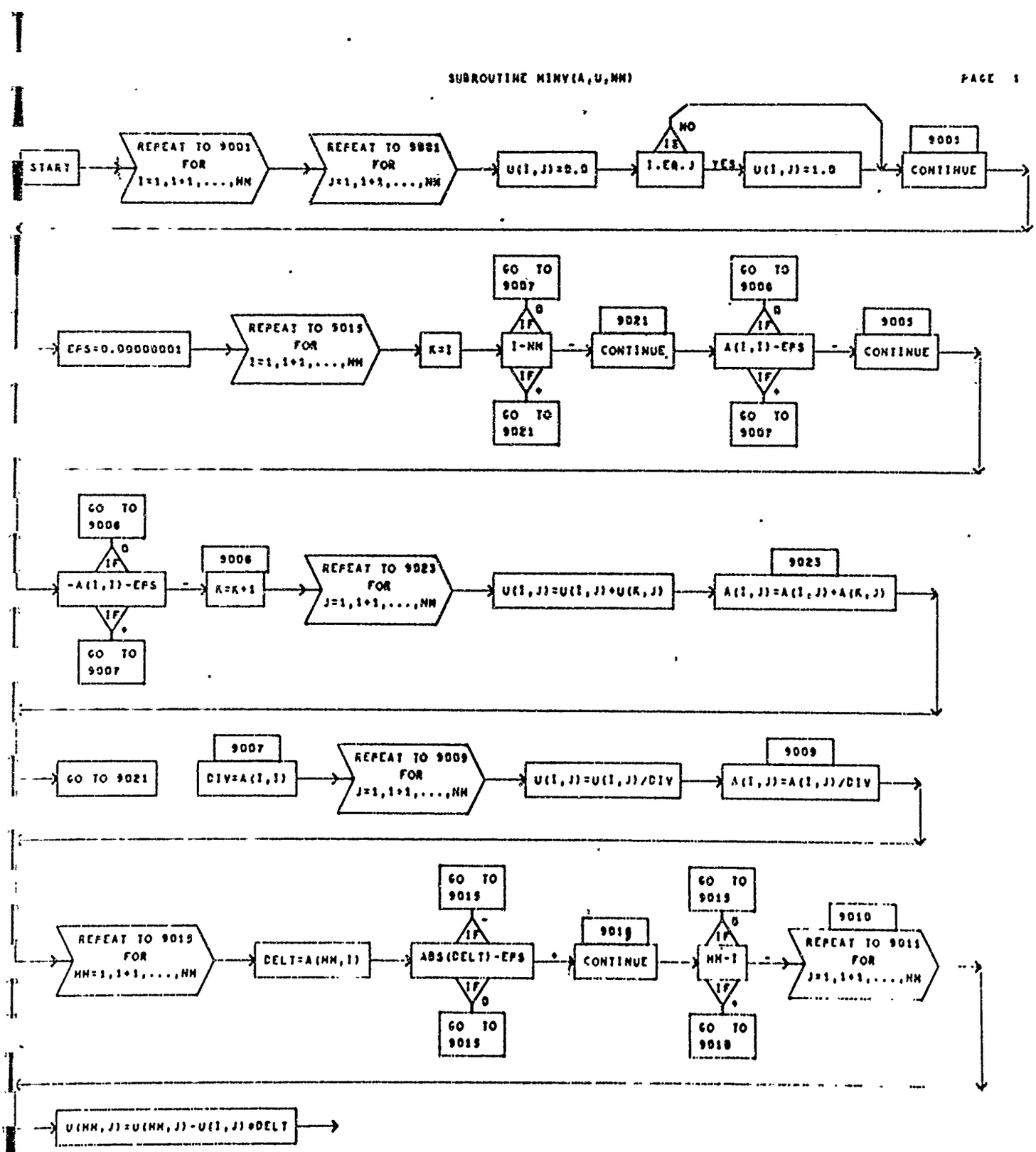
START
REPEAT TO 9001 FOR I=1,1+1,...,NN
REPEAT TO 9001 FOR J=1,1+1,...,NN
U(I,J)=0.0
I.EQ.J
NO
YES
U(I,J)=1.0
9001 CONTINUE
EPS=0.00000001
REPEAT TO 9015 FOR I=1,1+1,...,NN
K=I
GO TO 9007
IF 0
I-NN
IF +
GO TO 9021
9021 CONTINUE
GO TO 9006
IF 0
A(I,I)-EPS
IF +
GO TO 9007
9005 CONTINUE
GO TO 9006
IF 0
-A(I,I)-EPS
IF +
GO TO 9007
9006 K=K+1
REPEAT TO 9023 FOR J=1,1+1,...,NN
U(I,J)=U(I,J)+U(K,J)
9023 A(I,J)=A(I,J)+A(K,J)
GO TO 9021
9007 DIV=A(I,I)
REPEAT TO 9009 FOR J=1,1+1,...,NN
U(I,J)=U(I,J)/DIV
9009 A(I,J)=A(I,J)/DIV
REPEAT TO 9015 FOR MM=1,1+1,...,NN
DELT=A(MM,I)
GO TO 9015
IF -
ABS(DELT)-EPS
IF 0
GO TO 9015
9015 CONTINUE
GO TO 9015
IF 0
MM-I
IF +
GO TO 9018
9018 REPEAT TO 9011 FOR J=1,1+1,...,NN
U(MM,J)=U(MM,J)-U(I,J)*DELT

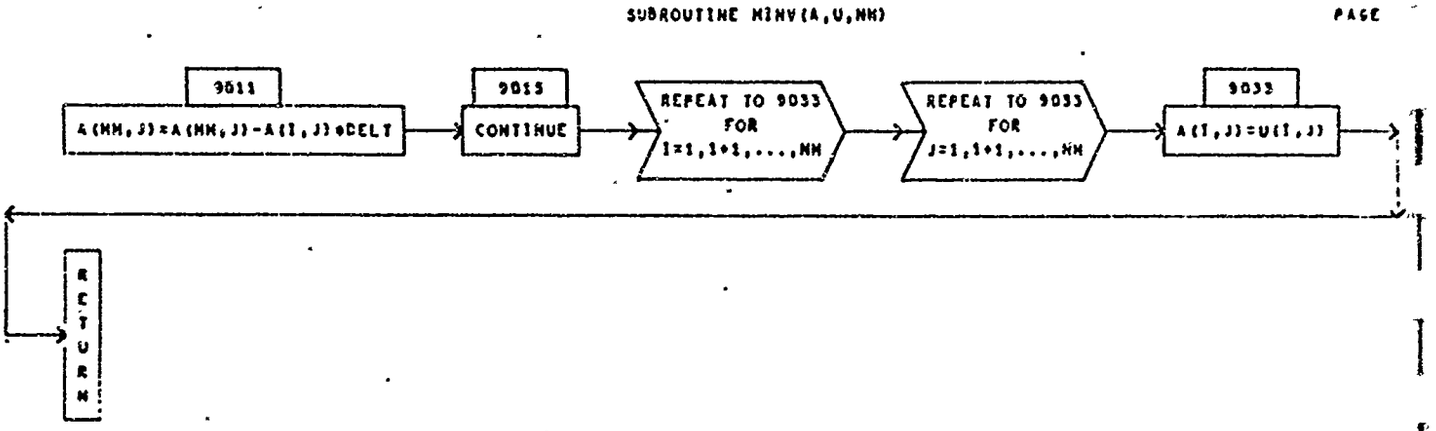
SUBROUTINE MINV(A,U,NN)
PAGE
9011
A(NN,J)=A(NN,J)-A(I,J)*DELT
9015
CONTINUE
REPEAT TO 9033
FOR
I=1,1+1,...,NN
REPEAT TO 9033
FOR
J=1,1+1,...,NN
9033
A(I,J)=U(I,J)
RETURN

EIGEN REDUCES STIFFNESS MATRIX AND INVERTS IT, REDUCES MASS MATRIX

DETERMINES EIGENVALUES AND EIGENVECTORS

THE ARGUMENTS ARE=

A - VECTOR OF LENGTH NRDF*(NRDF+1)/2

VALU - VECTOR OF LENGTH NEIG

TEMP,B,C,DUM3, - VECTORS OF LENGTH NRDF OR NMASS (SMALLER)

E - MATRIX OF DIMENSION (NRDF,3)

IDUM4 - VECTOR OF LENGTH NRDF OR NMASS (SMALLER)

ITAPE,JTAPE, MTAPE, NTAPE, - THESE ARE VARIOUS TAPES

NRDF - NUMBER OF DEGREES OF FREEDOM OF THE SYSTEM

NEIG - NUMBER OF EIGENVALUES DESIRED

NVEC - NUMBER OF EIGENVECTORS DESIRED

NMASS=NO. OF NORMAL DISPLACEMENTS

NOMASS=NO. OF ROTATIONAL DEGREES OF FREEDOM

STIFF IS ON NTAPE IN COMPACT FORM

MASS IS ON NTAPE IN COMPACT FORM

D I M E N S I O N E D V A R I A B L E S

SYMBOL	STORAGES	SYMBOL	STORAGES	SYMBOL	STORAGES	SYMBOL	STORAGES	SYMBOL	STORAGES
DUM3	NRDF	IDUM4	1	A	1	VALU	1	B	1
C	1	E	NRDF,3	TEN	1				

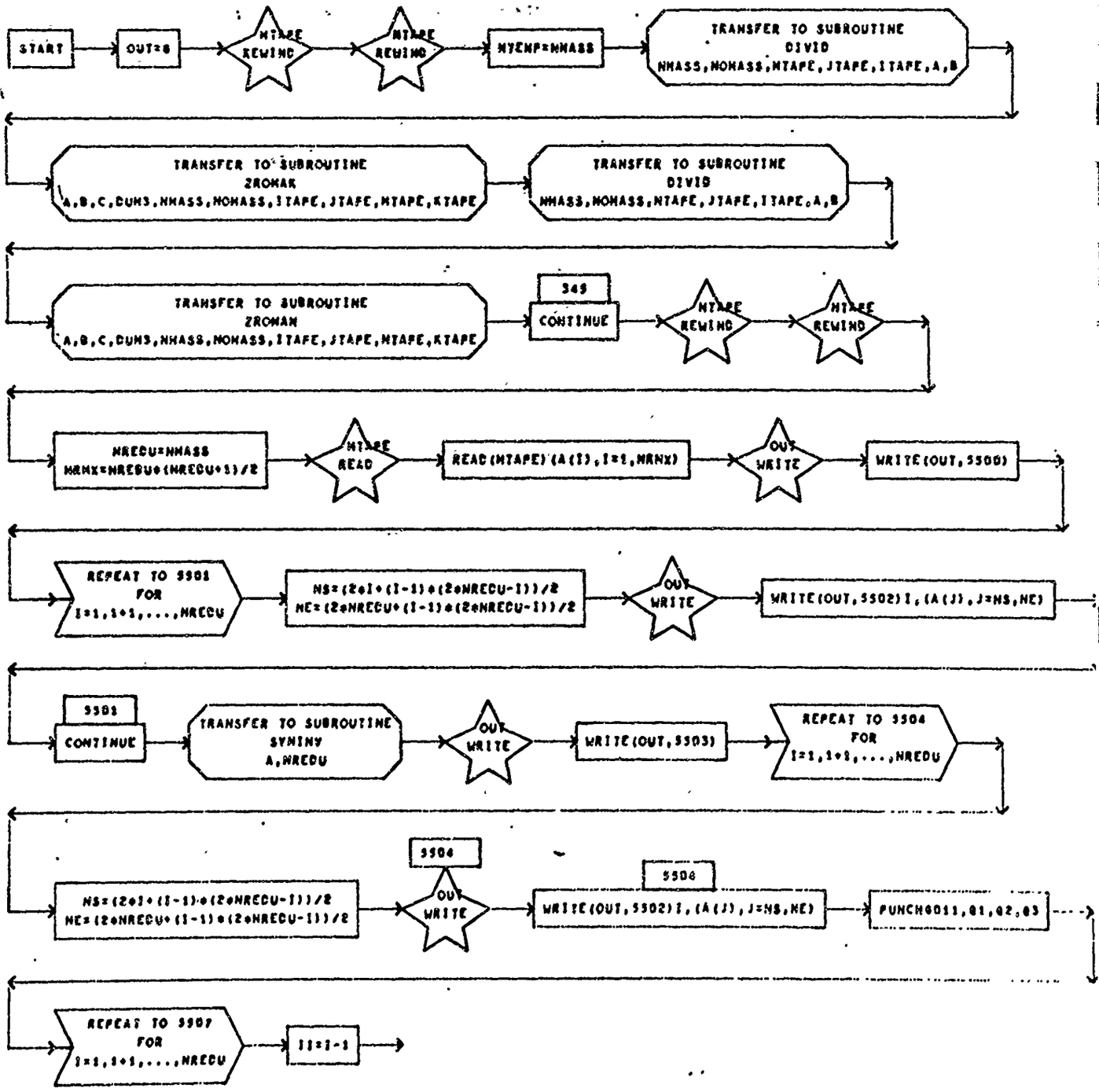
START
OUT=6
MTAPE REWIND
MTAPE REWIND
MTEMP=MMASS
TRANSFER TO SUBROUTINE DIVID MMASS,MOMASS,MTAPE,JTAPE,ITAPE,A,B
TRANSFER TO SUBROUTINE ZROMAR A,B,C,DUM3,MMASS,MOMASS,ITAPE,JTAPE,MTAPE,KTAPE
TRANSFER TO SUBROUTINE DIVIS MMASS,MOMASS,MTAPE,JTAPE,ITAPE,A,B
TRANSFER TO SUBROUTINE ZROMAN A,B,C,DUM3,MMASS,MOMASS,ITAPE,JTAPE,MTAPE,KTAPE
345
CONTINUE
MTAPE REWIND
MTAPE REWIND
MRECU=MMASS
MRMX=MRECU*(MRECU+1)/2
MTAPE READ
READ(MTAPE)(A(I),I=1,MRMX)
OUT WRITE
WRITE(OUT,5500)
REPEAT TO 5501 FOR I=1,1+1,...,MRECU
NS=(2*I+(I-1)*(2*MRECU-I))/2
NE=(2*MRECU+(I-1)*(2*MRECU-I))/2
OUT WRITE
WRITE(OUT,5502)I,(A(J),J=NS,NE)
5501
CONTINUE
TRANSFER TO SUBROUTINE SYMINV A,MRECU
OUT WRITE
WRITE(OUT,5503)
REPEAT TO 5504 FOR I=1,1+1,...,MRECU
5504
NS=(2*I+(I-1)*(2*MRECU-I))/2
NE=(2*MRECU+(I-1)*(2*MRECU-I))/2
OUT WRITE
5506
WRITE(OUT,5502)I,(A(J),J=NS,NE)
PUNCH6011,01,02,03
REPEAT TO 5507 FOR I=1,1+1,...,MRECU
II=I-1

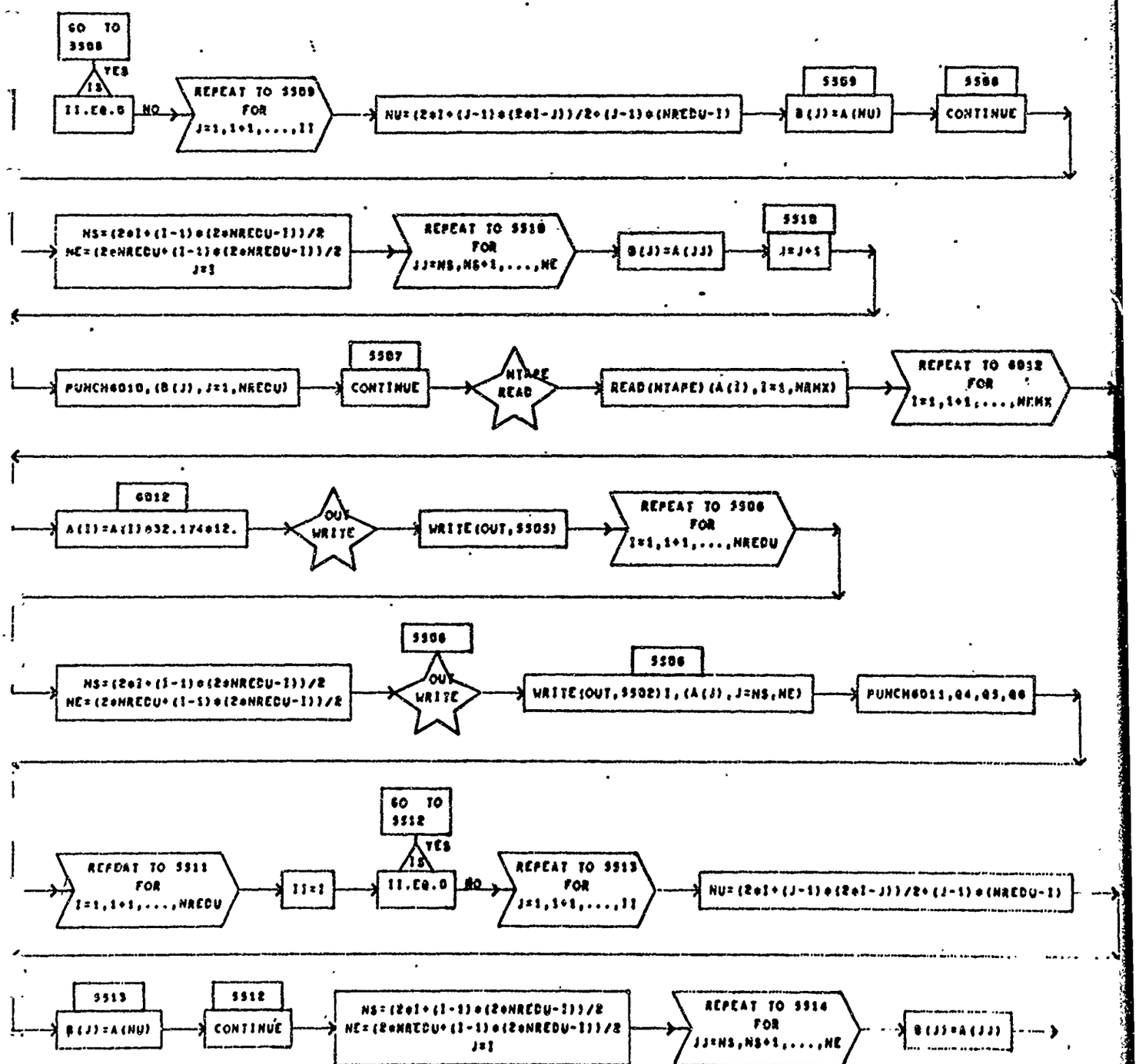
GO TO 5508
IS
YES
II.EQ.0
NO
REPEAT TO 5509 FOR J=1,1+1,...,II
NU=(2*I+(J-1)*(2*I-J))/2+(J-1)*(NREDU-1)
5509
B(J)=A(NU)
5508
CONTINUE
NS=(2*I+(I-1)*(2*NREDU-I))/2
NE=(2*NREDU+(I-1)*(2*NREDU-I))/2
J=I
REPEAT TO 5510 FOR JJ=NS,NS+1,...,NE
B(J)=A(JJ)
5510
J=J+1
PUNCH6010,(B(J),J=1,NREDU)
5507
CONTINUE
NTAPE READ
READ(NTAPE)(A(I),I=1,NRMX)
REPEAT TO 6012 FOR I=1,1+1,...,NRMX
6012
A(I)=A(I)*32.174*12.
OUT WRITE
WRITE(OUT,5505)
REPEAT TO 5506 FOR I=1,1+1,...,NREDU
NS=(2*I+(I-1)*(2*NREDU-I))/2
NE=(2*NREDU+(I-1)*(2*NREDU-I))/2
5506
OUT WRITE
5504
WRITE(OUT,5502)I,(A(J),J=NS,NE)
PUNCH6011,04,05,06
GO TO 5512
IS
YES
REPEAT TO 5511 FOR I=1,1+1,...,NREDU
II=I
II.EQ.0
NO
REPEAT TO 5513 FOR J=1,1+1,...,II
NU=(2*I+(J-1)*(2*I-J))/2+(J-1)*(NREDU-1)
5513
B(J)=A(NU)
5512
CONTINUE
NS=(2*I+(I-1)*(2*NREDU-I))/2
NE=(2*NREDU+(I-1)*(2*NREDU-I))/2
J=I
REPEAT TO 5514 FOR JJ=NS,NS+1,...,NE
B(J)=A(JJ)

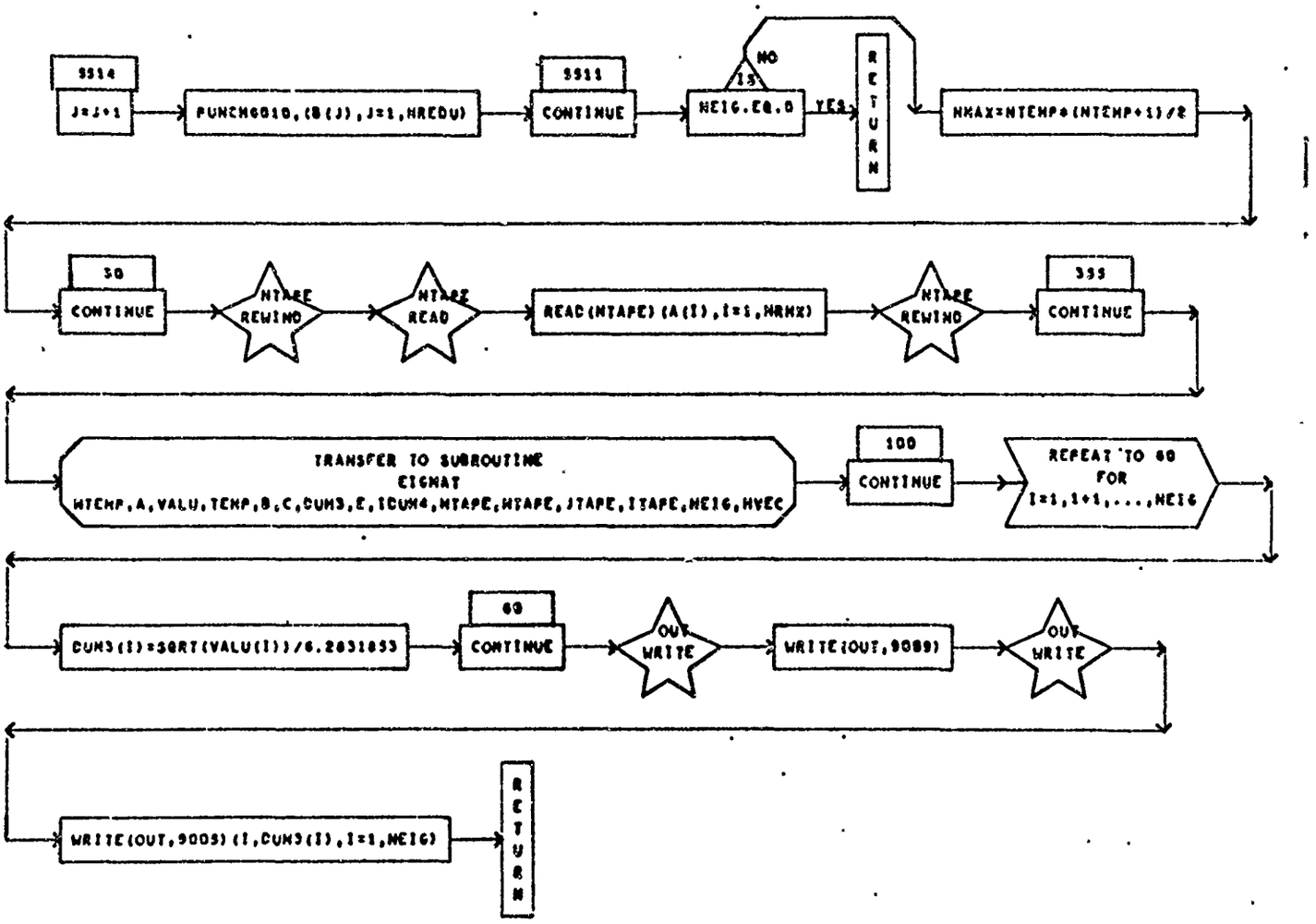
9914
J=J+1
PUNCH6010,(B(J),J=1,NREDU)
9911
CONTINUE
NO
IS
NEIG.EQ.0
YES
RETURN
NMAX=NTEMP*(NTEMP+1)/2
50
CONTINUE
NTAPE REWIND
NTAPE READ
READ(NTAPE)(A(I),I=1,NRMX)
NTAPE REWIND
555
CONTINUE
TRANSFER TO SUBROUTINE EIGNAT
NTEMP,A,VALU,TEMP,B,C,DUM3,E,IDUM4,NTAPE,NTAPE,JTAPE,ITAPE,NEIG,NVEC
100
CONTINUE
REPEAT TO 60 FOR I=1,1+1,...,NEIG
DUM3(I)=SQRT(VALU(I))/6.2831853
60
CONTINUE
OUT WRITE
WRITE(OUT,9089)
OUT WRITE
WRITE(OUT,9003)(I,DUM3(I),I=1,NEIG)
RETURN

COORDN ASSIGNS A COORD. NO. TO EACH DEGREE OF FREEDOM AT EACH JOINT

NR1,NR2,NR3 = ARRAYS CONTAINING RESTRAINT INFO. FOR EACH DEGREE OF FREEDOM AT EACH JOINT (FREE=0, CLAMPED=1)

N1,N2,N3 = COORD. NO. FOR EACH DEGREE OF FREEDOM (NORMAL DISPLACEMENTS ARE NUMBERED FIRST)

NJTS = NO. OF JOINTS

NREDU = NO. OF NORMAL DISPLACEMENTS

NDF = TOTAL NO. OF DEGREES OF FREEDOM (INCLUDING ROTATIONS)

DIMENSIONED VARIABLES

SYMBOL	STORAGES	SYMBOL	STORAGES	SYMBOL	STORAGES	SYMBOL	STORAGES	SYMBOL	STORAGES
NR1	50	NR2	50	NR3	50	N1	50	N2	50
N3	50								

SUBROUTINE COORDN(NR1,NR2,NR3,N1,N2,N3,NJTS,NREDU,NDF) PAGE 1

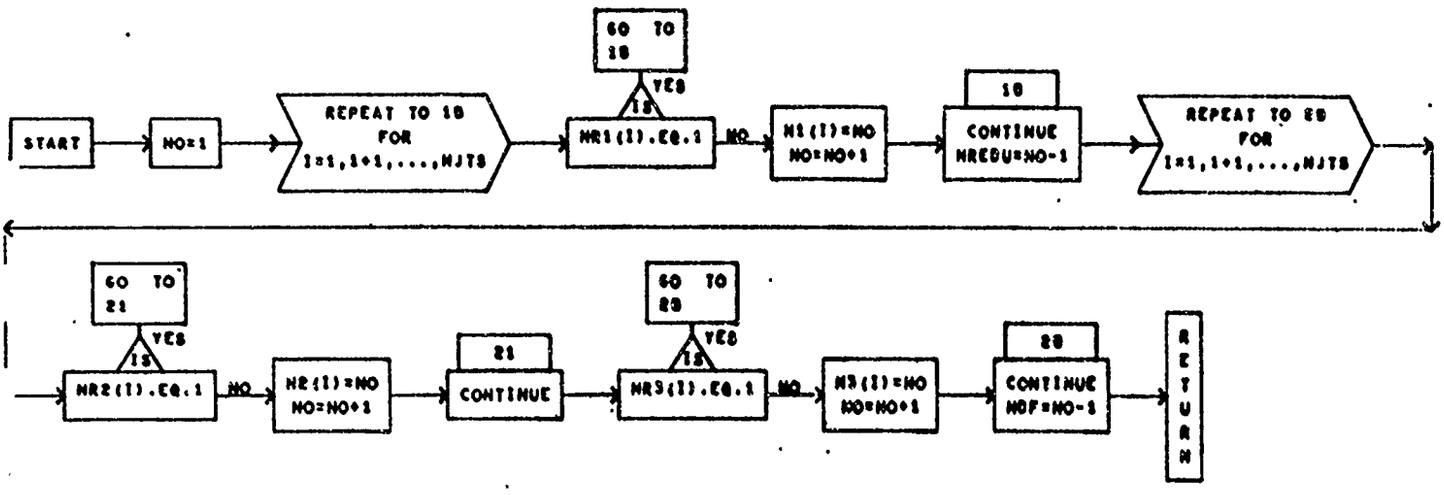

DBLINT

THIS SUBROUTINE EVALUATES THE DOUBLE INTEGRALS APPEARING IN THE

EQUATIONS FOR R AND H FOR THE TRIANGULAR PLATE ELEMENT

Y2,X3,Y3 = COORDS. OF PLATE CORNERS IN LOCAL COORDINATES

N,M = POWER OF X AND Y RESPECTIVELY, PRZEMIENIECKI, PAGE 385

D I M E N S I O N E D V A R I A B L E S

SYMBOL	STORAGES	SYMBOL	STORAGES	SYMBOL	STORAGES	SYMBOL	STORAGES	SYMBOL	STORAGES
A1	8	B1	7	P1	7	P2	7	P3	7

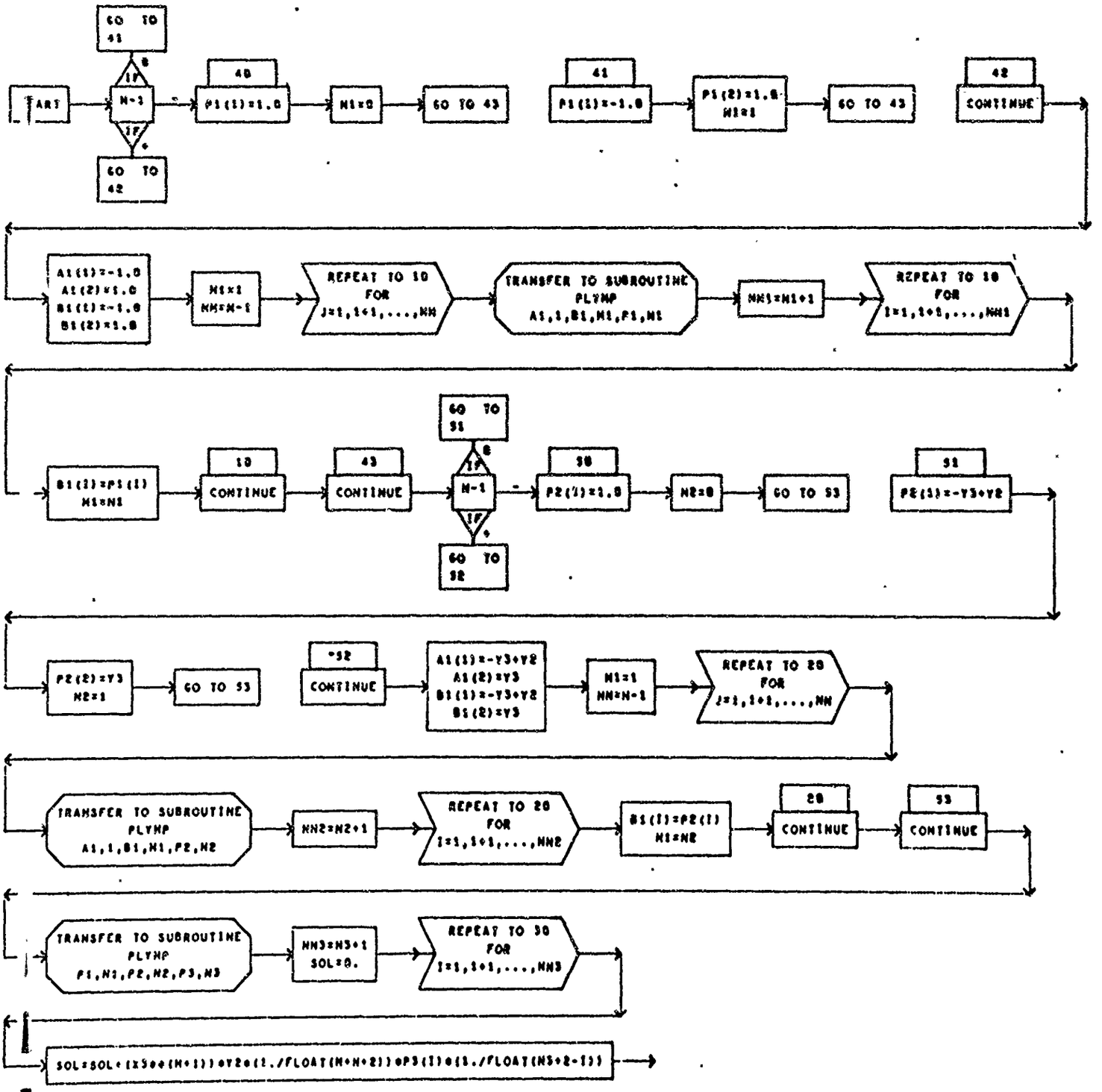
START
IF
GO TO 41
GO TO 42
40
P1(1)=1.0
N1=0
GO TO 43
41
P1(1)=-1.0
P1(2)=1.0
N1=1
GO TO 43
42
CONTINUE
A1(1)=-1.0
A1(2)=1.0
B1(1)=-1.0
B1(2)=1.0
N1=1
NN=N-1
REPEAT TO 10 FOR J=1,1+1,...,NN
TRANSFER TO SUBROUTINE PLYMP A1,1,B1,N1,P1,N1
NN1=N1+1
REPEAT TO 10 FOR I=1,1+1,...,NN1
B1(I)=P1(I)
N1=NN1
10
CONTINUE
43
CONTINUE
GO TO 91
GO TO 92
90
P2(1)=1.0
N2=0
GO TO 93
91
P2(1)=-Y3+Y2
P2(2)=Y3
N2=1
GO TO 93
92
CONTINUE
A1(1)=-Y3+Y2
A1(2)=Y3
B1(1)=-Y3+Y2
B1(2)=Y3
N1=1
NN=N-1
REPEAT TO 20 FOR J=1,1+1,...,NN
TRANSFER TO SUBROUTINE PLYMP A1,1,B1,N1,P2,N2
NN2=N2+1
REPEAT TO 20 FOR I=1,1+1,...,NN2
B1(I)=P2(I)
N1=N2
20
CONTINUE
93
CONTINUE
TRANSFER TO SUBROUTINE PLYMP P1,N1,P2,N2,P3,N3
NN3=N3+1
SOL=0.
REPEAT TO 30 FOR I=1,1+1,...,NN3
SOL=SOL+(X3**(N+1))*Y2*(1./FLOAT(N+N+2))*P3(I)*(1./FLOAT(N3+2-I))

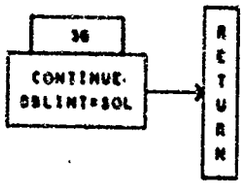
36
CONTINUE
OBLINT=SOL
RETURN

DMAT

THIS SUBROUTINE DETERMINES THE FLEXURAL RIGIDITY MATRIX IN

TRIANGLE LOCAL COORDINATES

DX,DY,D1,DXY,BETA = FLEXURAL RIGIDITY TERMS AND ANGLE OF MATERIAL

PRINCIPAL AXES W/O TRIANGLE LOCAL AXES

D = FLEXURAL RIGIDITY MATRIX IN TRIANGLE LOCAL COORDS.

D I M E N S I O N E D V A R I A B L E S

SYMBOL	STORAGES	SYMBOL	STORAGES	SYMBOL	STORAGES	SYMBOL	STORAGES	SYMBOL	STORAGES
D	3,3								

SUBROUTINE DMAT(DX,DY,D1,DXY,BETA,D) PAGE 1

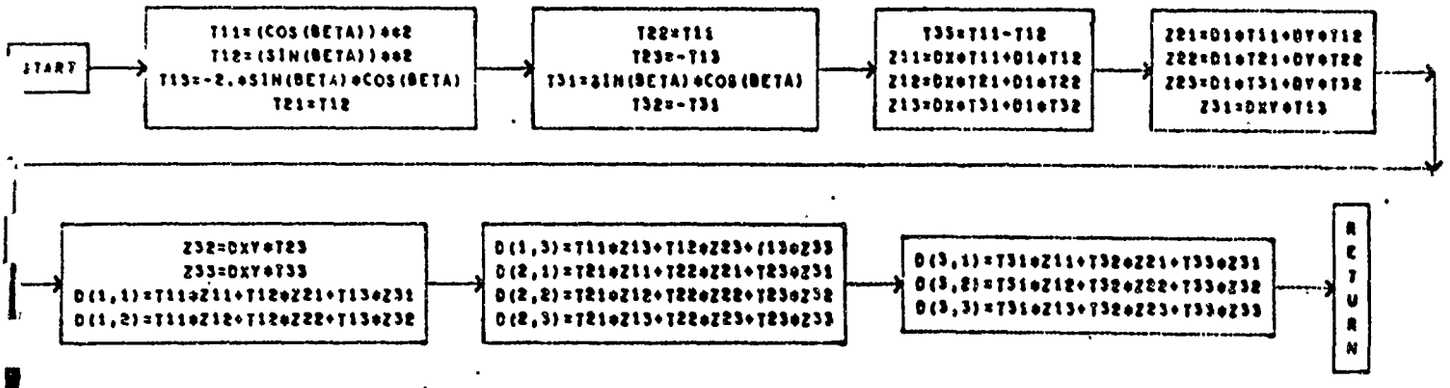

TRANS TRANSFORMATION DIRECTION COSINES

X1,Y1 = COORDS. OF POINT 1

X2,Y2 = COORDS. OF POINT 2

FL = DISTANCE BETWEEN POINTS 1 AND 2

DCS = DIRECTION COSINES OF VECTOR FROM POINT 1 TO POINT 2

D I M E N S I O N E D V A R I A B L E S

SYMBOL	STORAGES	SYMBOL	STORAGES	SYMBOL	STORAGES	SYMBOL	STORAGES	SYMBOL	STORAGES
DCS	2								

SUBROUTINE TRANS(X1,X2,Y1,Y2,FL,DCS) PAGE 1

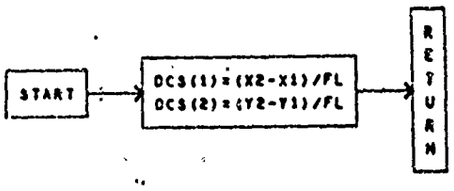

DINMAT

THIS SUBROUTINE DETERMINES THE DOUBLE INTEGRAL MATRIX FOR

THE K EQUATION FOR THE TRIANGULAR PLATE ELEMENT

Y2,X3,Y3 = COORDS. OF PLATE CORNERS IN LOCAL COORDINATES

Dx,Dy,D1,Dxy,BETA = FLEXURAL RIGIDITY TERMS AND ANGLE OF MATERIAL

PRINCIPAL AXES W/O TRIANGLE LOCAL AXES

P = DOUBLE INTEGRAL MATRIX

D I M E N S I O N E D V A R I A B L E S

SYMBOL	STORAGES	SYMBOL	STORAGES	SYMBOL	STORAGES	SYMBOL	STORAGES	SYMBOL	STORAGES
P	9,9	D	3,3						

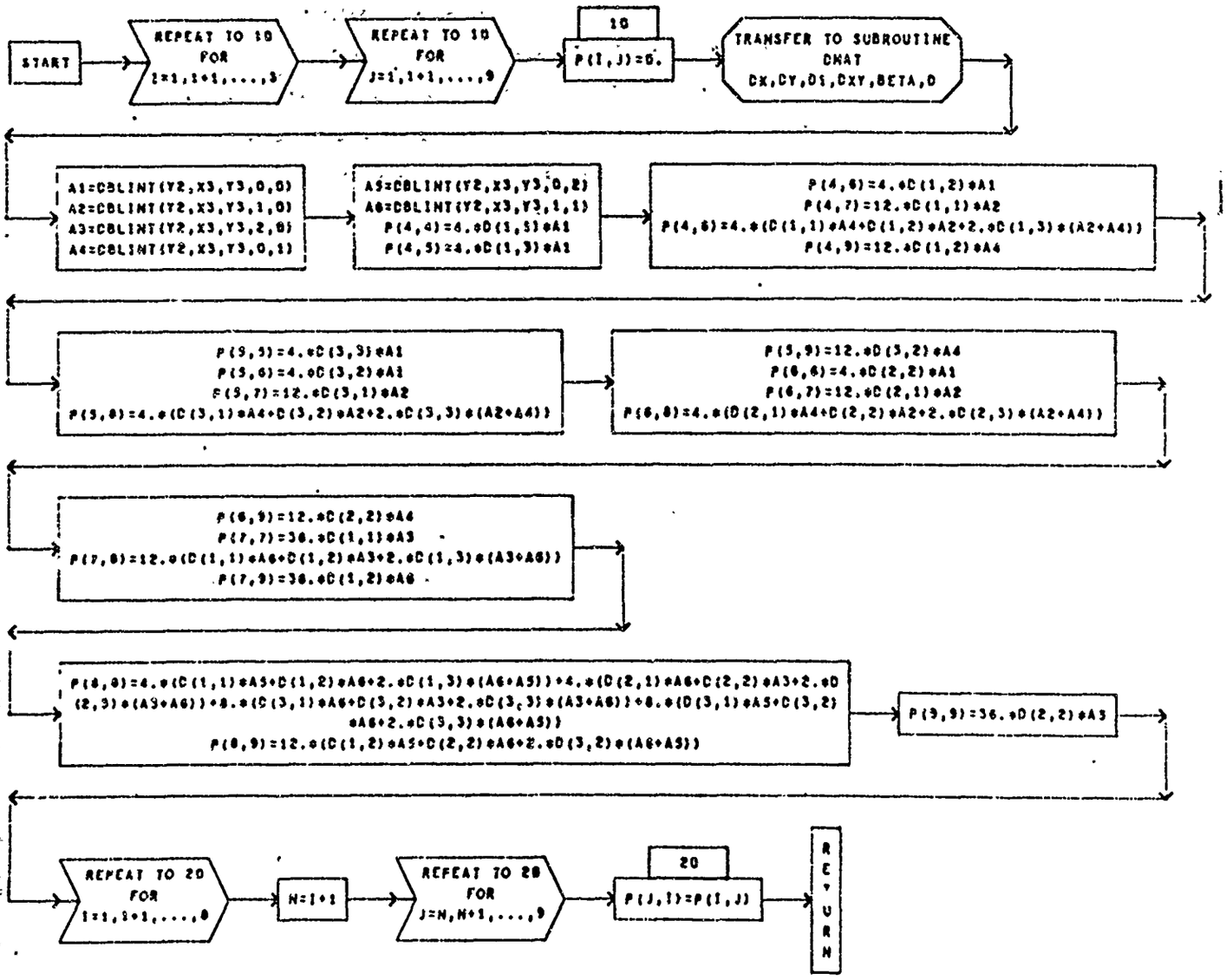
START
REPEAT TO 10 FOR I=1,1+1,...,3
REPEAT TO 10 FOR J=1,1+1,...,9
10
P(I,J)=0.
TRANSFER TO SUBROUTINE DHAT Dx,DY,D1,DXY,BETA,D
A1=DBLINT(Y2,X3,Y3,0,0)
A2=DBLINT(Y2,X3,Y3,1,0)
A3=DBLINT(Y2,X3,Y3,2,0)
A4=DBLINT(Y2,X3,Y3,0,1)
A5=DBLINT(Y2,X3,Y3,0,2)
A6=DBLINT(Y2,X3,Y3,1,1)
P(4,4)=4.*D(1,1)*A1
P(4,5)=4.*D(1,3)*A1
P(4,6)=4.*D(1,2)*A1
P(4,7)=12.*D(1,1)*A2
P(4,8)=4.*(D(1,1)*A4+D(1,2)*A2+2.*D(1,3)*(A2+A4))
P(4,9)=12.*D(1,2)*A4
P(5,5)=4.*D(3,3)*A1
P(5,6)=4.*D(3,2)*A1
P(5,7)=12.*D(3,1)*A2
P(5,8)=4.*(D(3,1)*A4+D(3,2)*A2+2.*D(3,3)*(A2+A4))
P(5,9)=12.*D(3,2)*A4
P(6,6)=4.*D(2,2)*A1
P(6,7)=12.*D(2,1)*A2
P(6,8)=4.*(D(2,1)*A4+D(2,2)*A2+2.*D(2,3)*(A2+A4))
P(6,9)=12.*D(2,2)*A4
P(7,7)=36.*D(1,1)*A3
P(7,8)=12.*(D(1,1)*A6+D(1,2)*A3+2.*D(1,3)*(A3+A6))
P(7,9)=36.*D(1,2)*A6
P(8,8)=4.*(D(1,1)*A5+D(1,2)*A6+2.*D(1,3)*(A6+A5))+4.*(D(2,1)*A6+D(2,2)*A3+2.*D(2,3)*(A5+A6))+8.*(D(3,1)*A6+D(3,2)*A3+2.*D(3,3)*(A3+A6))+8.*(D(3,1)*A5+D(3,2)*A6+2.*D(3,3)*(A6+A5))
P(8,9)=12.*(D(1,2)*A5+D(2,2)*A6+2.*D(3,2)*(A6+A5))
P(9,9)=36.*D(2,2)*A5
REPEAT TO 20 FOR I=1,1+1,...,8
N=I+1
REPEAT TO 20 FOR J=N,N+1,...,9
20
P(J,I)=P(I,J)
RETURN

CMAT

THIS SUBROUTINE FORMS THE C MATRIX RELATING THE CORNER

DISPLACEMENTS TO THE POLYNOMIAL DEFLECTION COEFFICIENTS

FOR THE TRIANGULAR PLATE ELEMENT

Y2,X3,Y3 = COORDS. OF PLATE CORNERS IN LOCAL COORDINATES

C = C MATRIX

DIMENSIONED VARIABLES

SYMBOL	STORAGES	SYMBOL	STORAGES	SYMBOL	STORAGES	SYMBOL	STORAGES	SYMBOL	STORAGES
C	9,9								

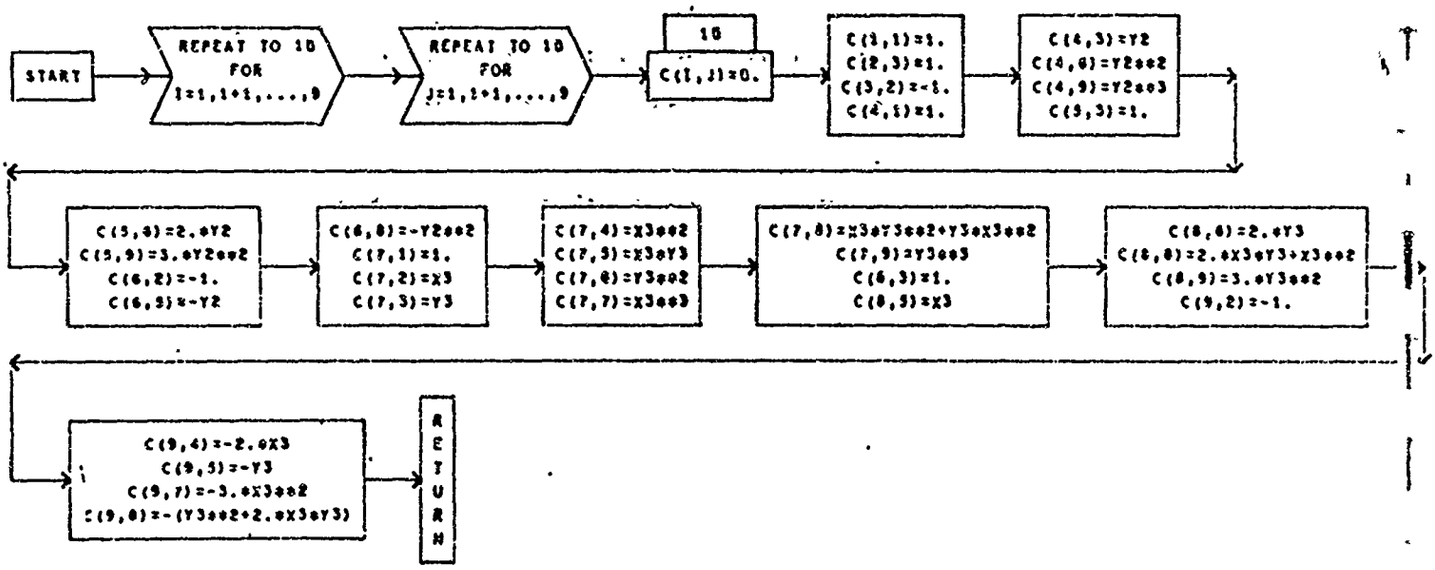
START
REPEAT TO 10 FOR I=1,I+1,...,9
REPEAT TO 10 FOR J=1,I+1,...,9
10
C(I,J)=0.
C(1,1)=1.
C(2,3)=1.
C(3,2)=-1.
C(4,1)=1.
C(4,3)=Y2
C(4,6)=Y2**2
C(4,9)=Y2**3
C(5,5)=1.
C(5,6)=2.*Y2
C(5,9)=3.*Y2**2
C(6,2)=-1.
C(6,5)=-Y2
C(6,8)=-Y2**2
C(7,1)=1.
C(7,2)=X3
C(7,3)=Y3
C(7,4)=X3**2
C(7,5)=X3*Y3
C(7,6)=Y3**2
C(7,7)=X3**3
C(7,8)=X3*Y3**2+Y3*X3**2
C(7,9)=Y3**3
C(8,5)=1.
C(8,5)=X3
C(8,6)=2.*Y3
C(8,8)=2.*X3*Y3+X3**2
C(8,9)=3.*Y3**2
C(9,2)=-1.
C(9,4)=-2.*X3
C(9,5)=-Y3
C(9,7)=-3.*X3**2
C(9,8)=-(Y3**2+2.*X3*Y3)
RETURN

PLATER

THIS SUBROUTINE DETERMINES THE STIFFNESS MATRIX OF A

TRIANGLE PLATE ELEMENT IN SYSTEM COORDS.

Y2,X3,Y3 = COORDS. OF PLATE CORNERS IN LOCAL COORDINATES

Dx,Dy,D1,Dxy,BETA = FLEXURAL RIGIDITY TERMS AND ANGLE OF MATERIAL

PRINCIPAL AXES W/O TRIANGLE LOCAL AXES

DCS = DIRECTION COSINES

PLTK = STIFFNESS MATRIX

D I M E N S I O N E D V A R I A B L E S

SYMBOL	STORAGES	SYMBOL	STORAGES	SYMBOL	STORAGES	SYMBOL	STORAGES	SYMBOL	STORAGES
PLTK	9,9	C	9,9	CINV	9,9	P	9,9	R	9,9
T	9,9	STIFF	9,9	DCS	2				

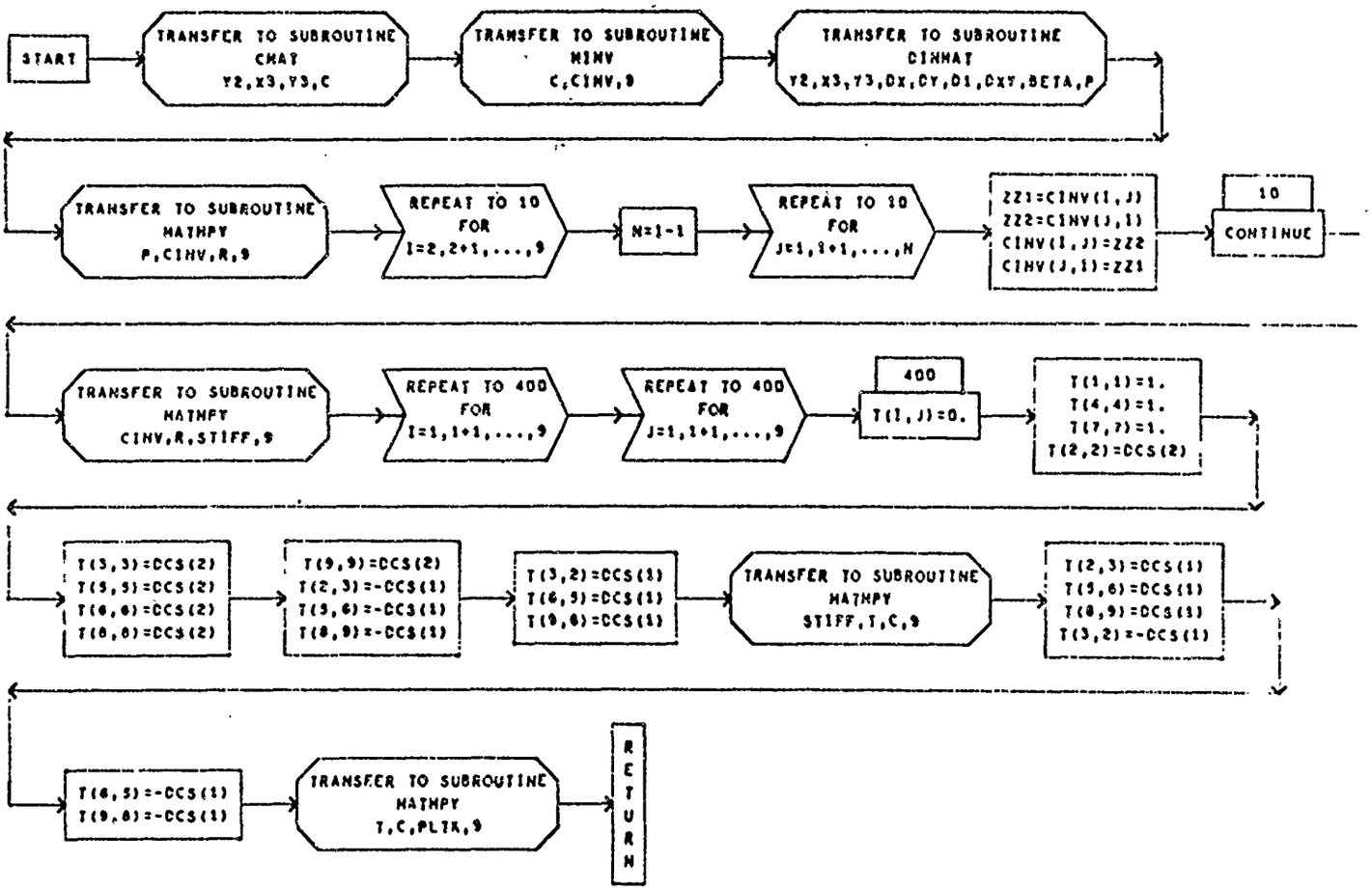
START
TRANSFER TO SUBROUTINE CMAT Y2,X3,Y3,C
TRANSFER TO SUBROUTINE MINV C,CINV,9
TRANSFER TO SUBROUTINE CINMAT Y2,X3,Y3,Dx,Dy,D1,Dxy,BETA,P
TRANSFER TO SUBROUTINE MATMPY P,CINV,R,9
REPEAT TO 10 FOR I=2,2+1,...,9
N=I-1
REPEAT TO 10 FOR J=1,I+1,...,N
ZZ1=CINV(I,J)
ZZ2=CINV(J,I)
CINV(I,J)=ZZ2
CINV(J,I)=ZZ1
10
CONTINUE
TRANSFER TO SUBROUTINE MATMPY CINV,R,STIFF,9
REPEAT TO 400 FOR I=1,1+1,...,9
REPEAT TO 400 FOR J=1,1+1,...,9
400
T(I,J)=0.
T(1,1)=1.
T(4,4)=1.
T(7,7)=1.
T(2,2)=DCS(2)
T(3,3)=DCS(2)
T(5,5)=DCS(2)
T(6,6)=DCS(2)
T(8,8)=DCS(2)
T(9,9)=DCS(2)
T(2,3)=-DCS(1)
T(5,6)=-DCS(1)
T(8,9)=-DCS(1)
T(3,2)=DCS(1)
T(6,5)=DCS(1)
T(9,8)=DCS(1)
TRANSFER TO SUBROUTINE MATMPY STIFF,T,C,9
T(2,3)=DCS(1)
T(5,6)=DCS(1)
T(8,9)=DCS(1)
T(3,2)=-DCS(1)
T(6,5)=-DCS(1)
T(9,8)=-DCS(1)
TRANSFER TO SUBROUTINE MATMPY T,C,PLTK,9
RETURN

PLATEM

THIS SUBROUTINE DETERMINES THE MASS MATRIX OF A

TRIANGLE PLATE ELEMENT IN SYSTEM COORDS.

Y2,X3,Y3 = COORDS. OF PLATE CORNERS IN LOCAL COORDINATES

PRHO = DENSITY

PTH = PLATE THICKNESS

DCS = DIRECTION COSINES

PLTM = MASS MATRIX

D I M E N S I O N E D V A R I A B L E S

SYMBOL	STORAGES	SYMBOL	STORAGES	SYMBOL	STORAGES	SYMBOL	STORAGES	SYMBOL	STORAGES
PLTM	9,9	C	9,9	CINV	9,0	P	9,9	R	9,9
T	9,9	PMASS	9,9	DCS	2				

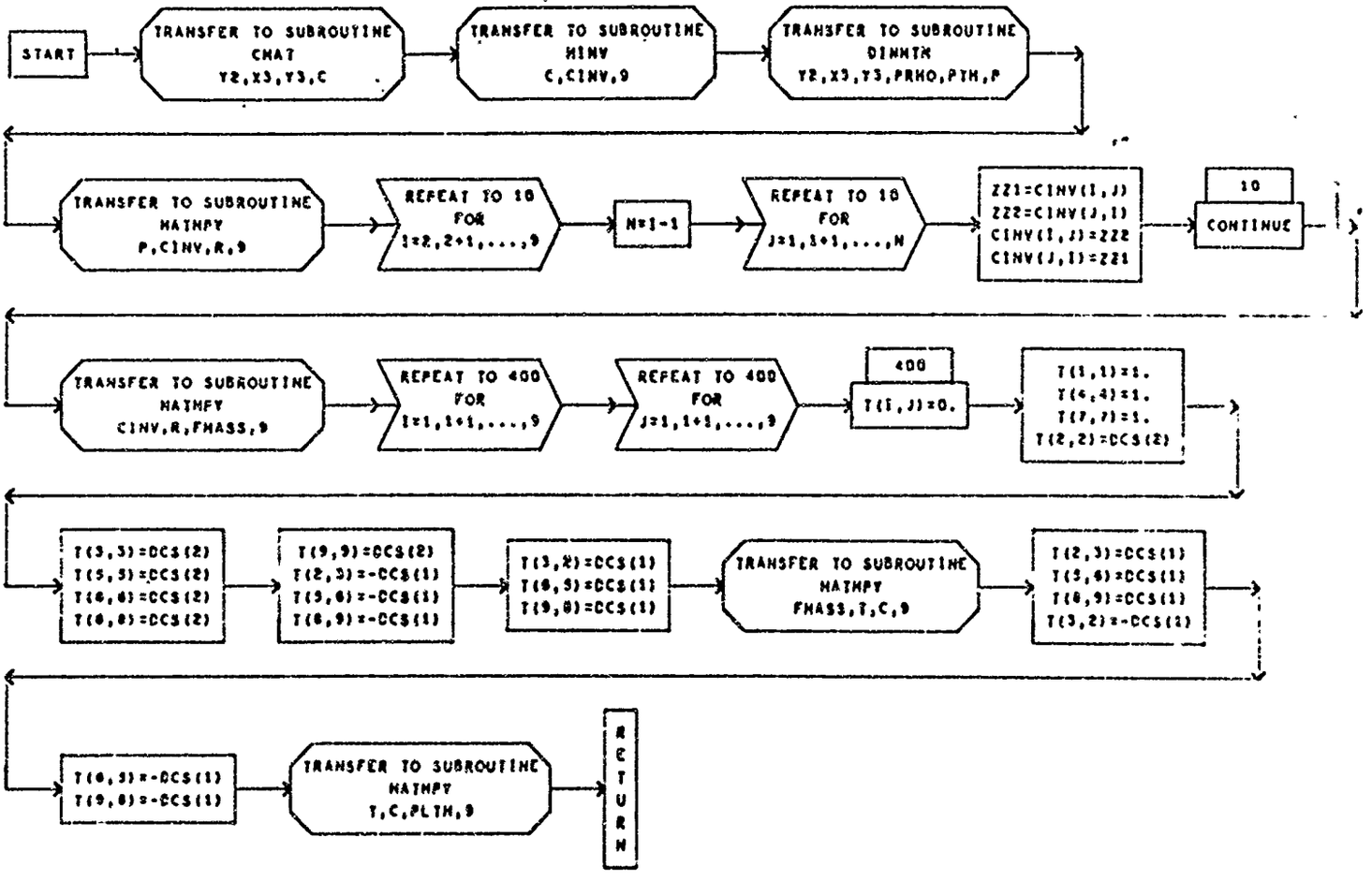
START
TRANSFER TO SUBROUTINE CHAT Y2,X3,Y3,C
TRANSFER TO SUBROUTINE MINV C,CINV,9
TRANSFER TO SUBROUTINE DINMTM Y2,X3,Y3,PRHO,PTH,P
TRANSFER TO SUBROUTINE MATMPY P,CINV,R,9
REPEAT TO 10 FOR I=2,2+1,...,9
N=I-1
REPEAT TO 10 FOR J=1,1+1,...,N
ZZ1=CINV(I,J)
ZZ2=CINV(J,I)
CINV(I,J)=ZZ2
CINV(J,I)=ZZ1
10
CONTINUE
TRANSFER TO SUBROUTINE MATMPY CINV,R,FMASS,9
REPEAT TO 400 FOR I=1,1+1,...,9
REPEAT TO 400 FOR J=1,1+1,...,9
400
T(I,J)=0.
T(1,1)=1.
T(4,4)=1.
T(7,7)=1.
T(2,2)=DCS(2)
T(3,3)=DCS(2)
T(5,5)=DCS(2)
T(6,6)=DCS(2)
T(8,8)=DCS(2)
T(9,9)=DCS(2)
T(2,3)=-DCS(1)
T(5,6)=-DCS(1)
T(8,9)=-DCS(1)
T(3,2)=DCS(1)
T(6,5)=DCS(1)
T(9,8)=DCS(1)
TRANSFER TO SUBROUTINE MATMPY FMASS,T,C,9
T(2,3)=DCS(1)
T(5,6)=DCS(1)
T(8,9)=DCS(1)
T(3,2)=-DCS(1)
T(6,5)=-DCS(1)
T(9,8)=-DCS(1)
TRANSFER TO SUBROUTINE MATMPY T,C,PLTM,9
RETURN

BEAMM PLANE GRID BEAM ELEMENT MASS MATRIX IN SYSTEM COORDS.

FL = BEAM LENGTH

RHO = DENSITY

A = CROSS SECTIONAL AREA

XI = AREA MOMENT OF INERTIA

XJ = EFFECTIVE TORSIONAL MOMENT OF INERTIA

SMM = MASS MATRIX

DCS = DIRECTION COSINES

D I M E N S I O N E D V A R I A B L E S

SYMBOL	STORAGES	SYMBOL	STORAGES	SYMBOL	STORAGES	SYMBOL	STORAGES	SYMBOL	STORAGES
SMM	9,6	DCS	2						

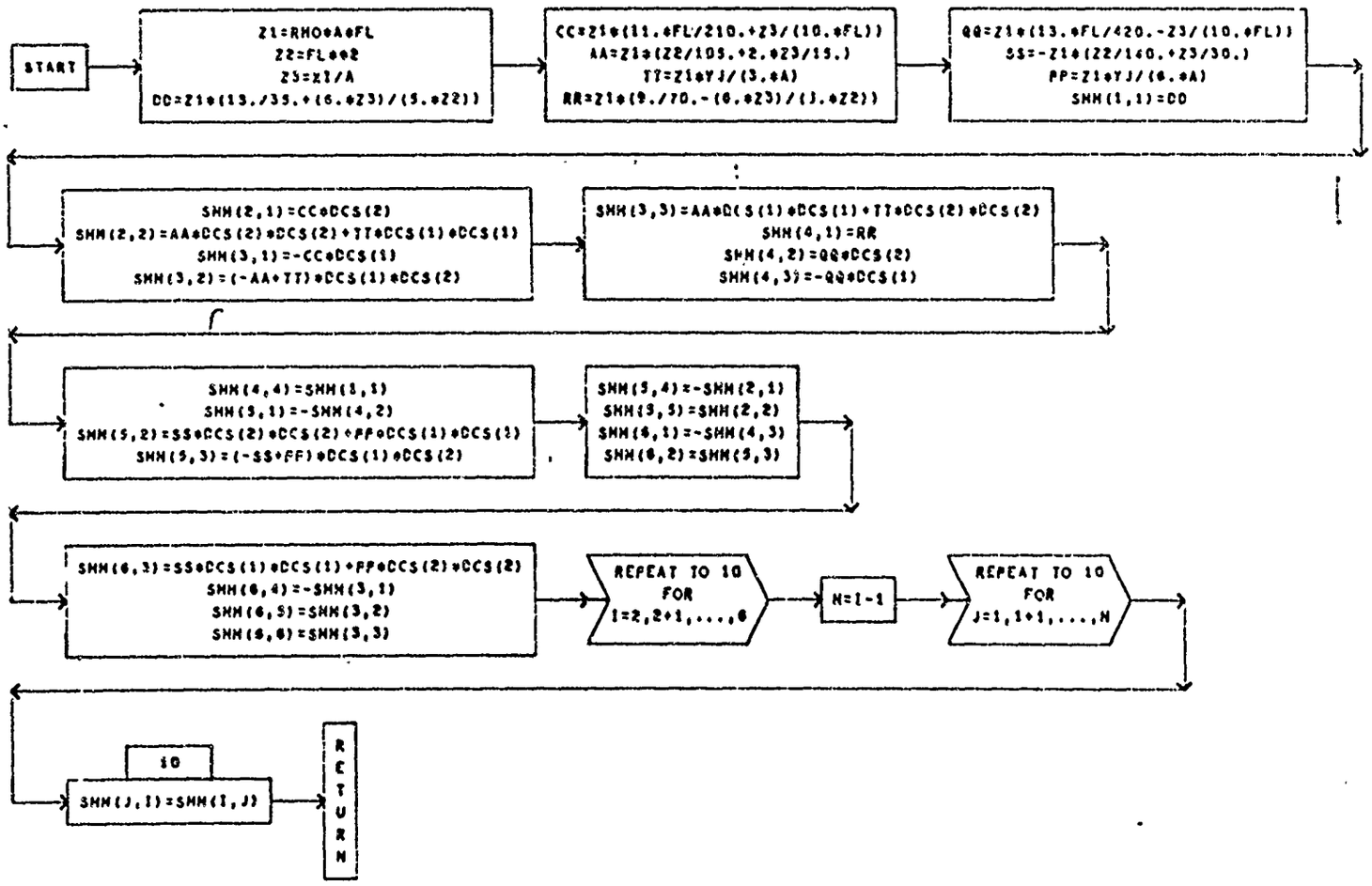
START
Z1=RHO*A*FL
Z2=FL**2
Z3=Z1/A
DD=Z1*(13./35.+(6.*Z3)/(5.*Z2))
CC=Z1*(11.*FL/210.+Z3/(10.*FL))
AA=Z1*(Z2/105.+2.*Z3/15.)
TT=Z1*YJ/(3.*A)
RR=Z1*(9./70.-(6.*Z3)/(5.*Z2))
QQ=Z1*(13.*FL/420.-Z3/(10.*FL))
SS=-Z1*(Z2/140.+Z3/30.)
PP=Z1*YJ/(6.*A)
SMM(1,1)=DD
SMM(2,1)=CC*DCS(2)
SMM(2,2)=AA*DCS(2)*DCS(2)+TT*DCS(1)*DCS(1)
SMM(3,1)=-CC*DCS(1)
SMM(3,2)=(-AA+TT)*DCS(1)*DCS(2)
SMM(3,3)=AA*DCS(1)*DCS(1)+TT*DCS(2)*DCS(2)
SMM(4,1)=RR
SMM(4,2)=QQ*DCS(2)
SMM(4,3)=-QQ*DCS(1)
SMM(4,4)=SMM(1,1)
SMM(5,1)=-SMM(4,2)
SMM(5,2)=SS*DCS(2)*DCS(2)+PP*DCS(1)*DCS(1)
SMM(5,3)=(-SS+PP)*DCS(1)*DCS(2)
SMM(5,4)=-SMM(2,1)
SMM(5,5)=SMM(2,2)
SMM(6,1)=-SMM(4,3)
SMM(6,2)=SMM(5,3)
SMM(6,3)=SS*DCS(1)*DCS(1)+PP*DCS(2)*DCS(2)
SMM(6,4)=-SMM(3,1)
SMM(6,5)=SMM(3,2)
SMM(6,6)=SMM(3,3)
REPEAT TO 10 FOR I=2,2+1,...,6
N=I-1
REPEAT TO 10 FOR J=1,1+1,...,N
10
SMM(J,I)=SMM(I,J)
RETURN

BIVIB

N=NO. OF NORMAL DISPLACEMENTS

M=NO. OF ROTATIONAL D.O.F.

MTPE-CONTAINS STIFFNESS (OR MASS) MATRIX

MTPE-K12 (M12) STORED

ITPE-K11 (M11) STORED

A- DUMMY STORAGE VECTOR,LARGER OF (N*(N+1)/2 OR M*(M+1)/2)

D I M E N S I O N E D V A R I A B L E S

SYMBOL	STORAGES	SYMBOL	STORAGES	SYMBOL	STORAGES	SYMBOL	STORAGES	SYMBOL	STORAGES
A	1	B	1						

SUBROUTINE DIVID (N,M,NTPE,MTPE,ITPE,A,B)

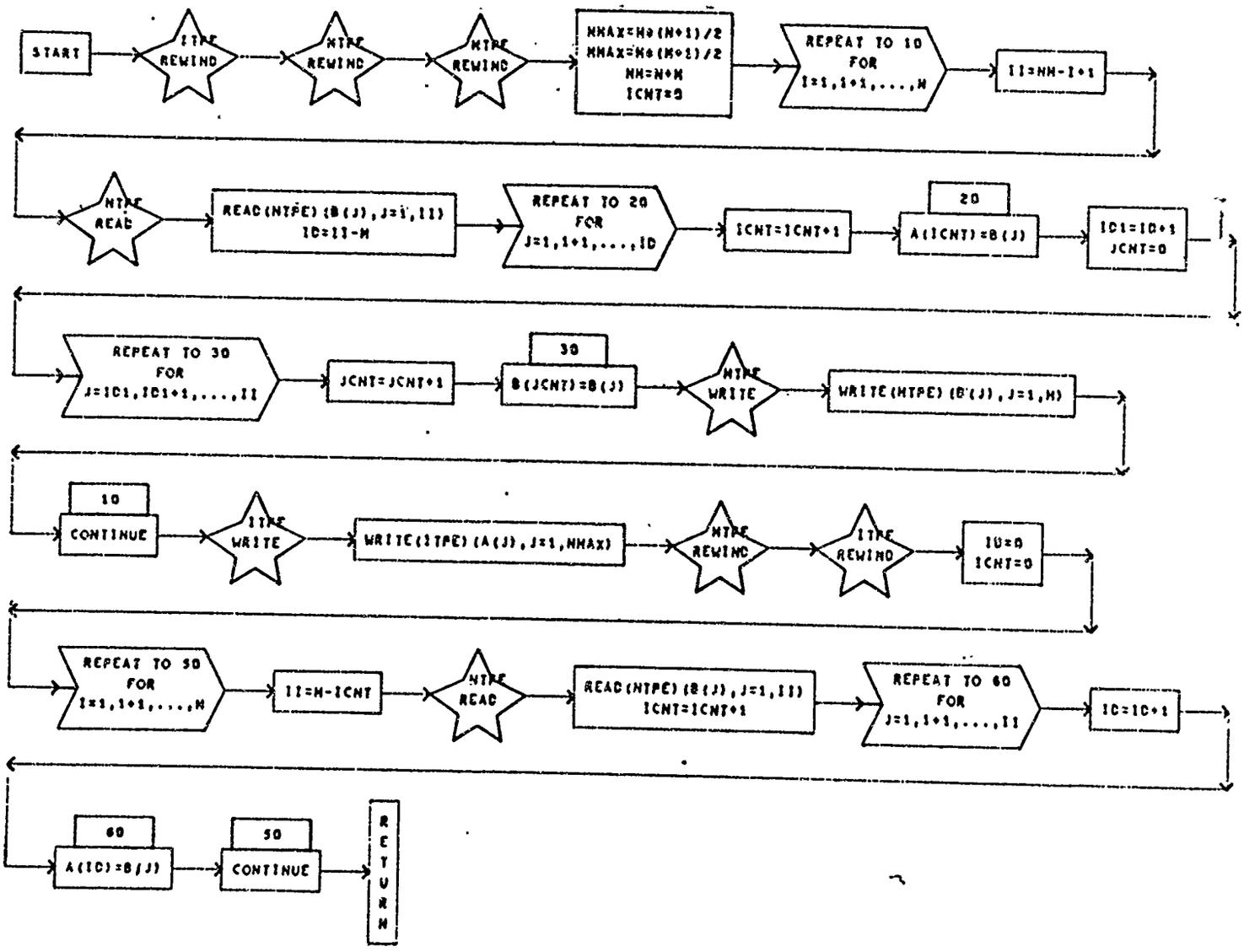

ZROMAR

B IS A DUMMY VECTOR WITH STORAGE N OR M (LARGER)

A IS A DUMMY VECTOR WITH STORAGE M*(M+1)/2 OR M*(M+1)/2 (LARGER)

B IS A DUMMY VECTOR WITH STORAGE N OR M (LARGER)

C IS A DUMMY VECTOR WITH STORAGE N OR M (LARGER)

N=NO. OF NORMAL DISPLACEMENTS

M=NO. OF ROTATIONAL D.O.F.

NTPE CONTAINS K11 MATRIX

NTPE CONTAINS K12 MATRIX

ITPE SCRATCH TAPE

KTPE STORES K12*K22**(-1)

A INITIALLY CONTAINS K22 INVERSE

*** REDUCED STIFFNESS MATRIX IS STORED ON ITPE

D I M E N S I O N E D V A R I A B L E S

SYMBOL	STORAGES	SYMBOL	STORAGES	SYMBOL	STORAGES	SYMBOL	STORAGES	SYMBOL	STORAGES
A	1	B	1	C	1	D	1		

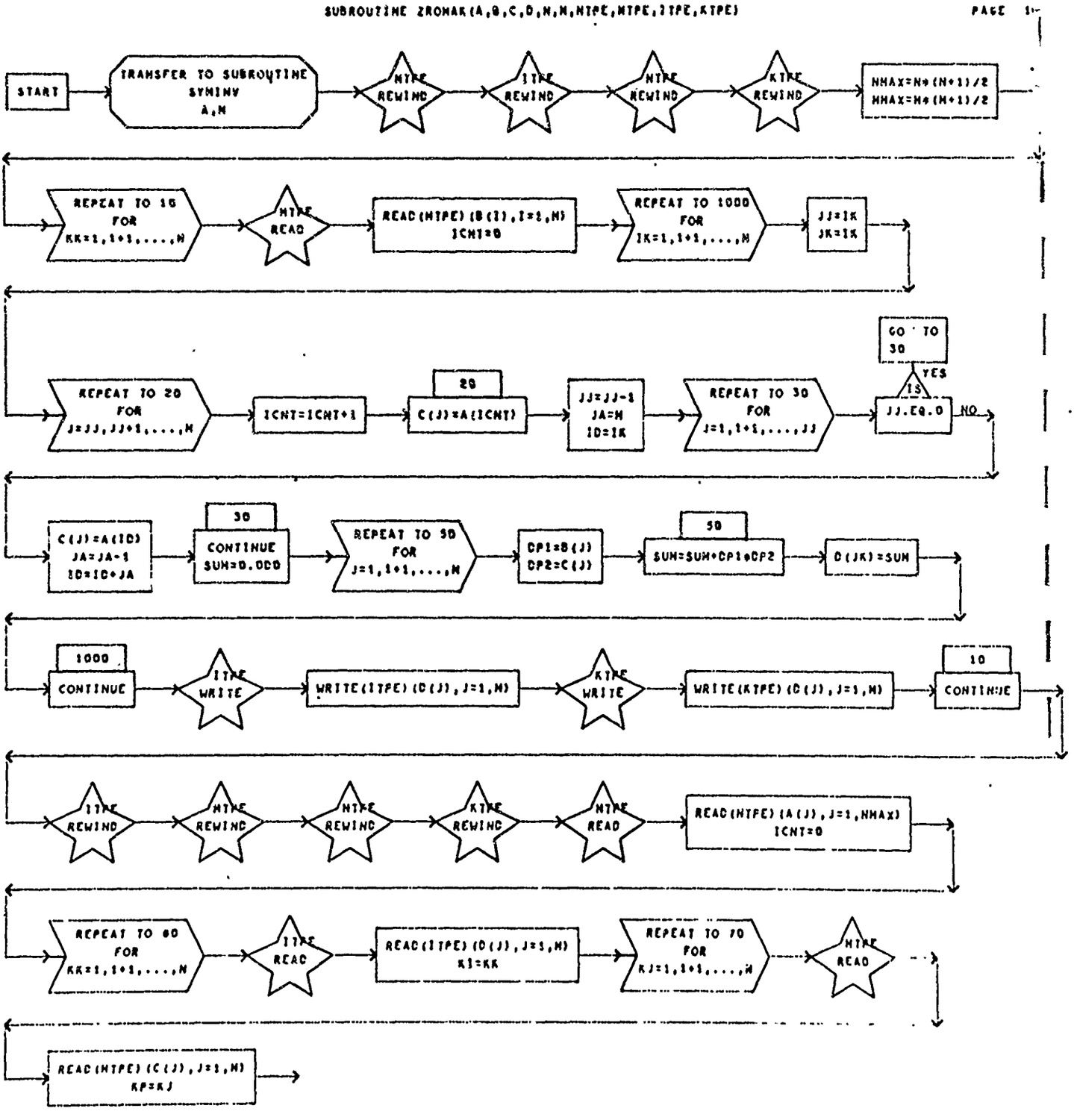
SUBROUTINE ZROMAK(A,B,C,D,N,M,NTPE,MTPE,ITPE,KTPE)
PAGE 1
START
TRANSFER TO SUBROUTINE SYMINV A,N
NTPE REWIND
ITPE REWIND
MTPE REWIND
KTPE REWIND
NMAX=N*(N+1)/2
MMAX=M*(M+1)/2
REPEAT TO 10 FOR KK=1,1+1,...,N
NTPE READ
READ(NTPE)(B(I),I=1,M) ICNT=0
REPEAT TO 1000 FOR IK=1,1+1,...,N
JJ=IK
JK=IK
GO TO 30
IS JJ.EQ.0
YES
NO
REPEAT TO 20 FOR J=JJ,JJ+1,...,M
ICNT=ICNT+1
20
C(J)=A(ICNT)
JJ=JJ-1
JA=M
ID=IK
REPEAT TO 30 FOR J=1,1+1,...,JJ
C(J)=A(ID)
JA=JA-1
ID=ID+JA
30
CONTINUE SUM=0.000
REPEAT TO 50 FOR J=1,1+1,...,M
DP1=B(J)
DP2=C(J)
50
SUM=SUM+DP1*DP2
D(JK)=SUM
1000
CONTINUE
ITPE WRITE
WRITE(ITPE)(D(J),J=1,M)
KTPE WRITE
WRITE(KTPE)(D(J),J=1,M)
10
CONTINUE
ITPE REWIND
MTPE REWIND
MTPE REWIND
KTPE REWIND
MTPE READ
READ(MTPE)(A(J),J=1,MMAX) ICNT=0
REPEAT TO 80 FOR KK=1,1+1,...,N
ITPE READ
READ(ITPE)(D(J),J=1,M) KI=KK
REPEAT TO 70 FOR KJ=1,1+1,...,M
MTPE READ
READ(MTPE)(C(J),J=1,M) KP=KJ

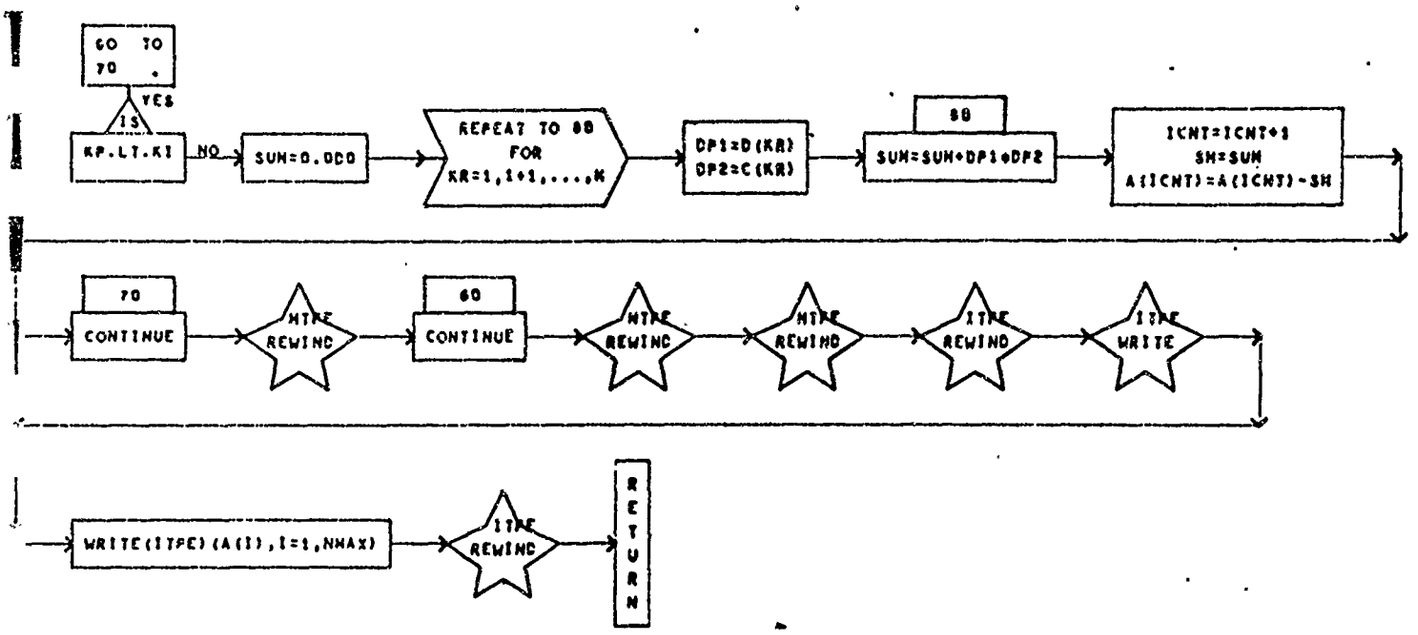
GO TO 70
IS
YES
KP.LT.KI
NO
SUM=0.000
REPEAT TO 80 FOR KR=1,I+1,...,N
DP1=D(KR)
DP2=C(KR)
80
SUM=SUM+DP1+DP2
ICNT=ICNT+1
SH=SUM
A(ICNT)=A(ICNT)-SH
70
CONTINUE
MTPE REWIND
60
CONTINUE
MTPE REWIND
MTPE REWIND
ITPE REWIND
ITPE WRITE
WRITE(ITPE)(A(I),I=1,NMAX)
ITPE REWIND
RETURN

ZROMAX

N=NO. OF NORMAL DISPLACEMENTS

M=NO. OF ROTATIONAL D.O.F.

NTPE CONTAINS N11 MATRIX

MTPE CONTAINS N12 MATRIX

ITPE SCRATCH TAPE

KTPE CONTAINS K12*K22**(-1)

*** REDUCED MASS MATRIX IS STORED ON ITPE

DIMENSIONED VARIABLES

SYMBOL	STORAGES	SYMBOL	STORAGES	SYMBOL	STORAGES	SYMBOL	STORAGES	SYMBOL	STORAGES
A	1	B	1	C	1	D	1		

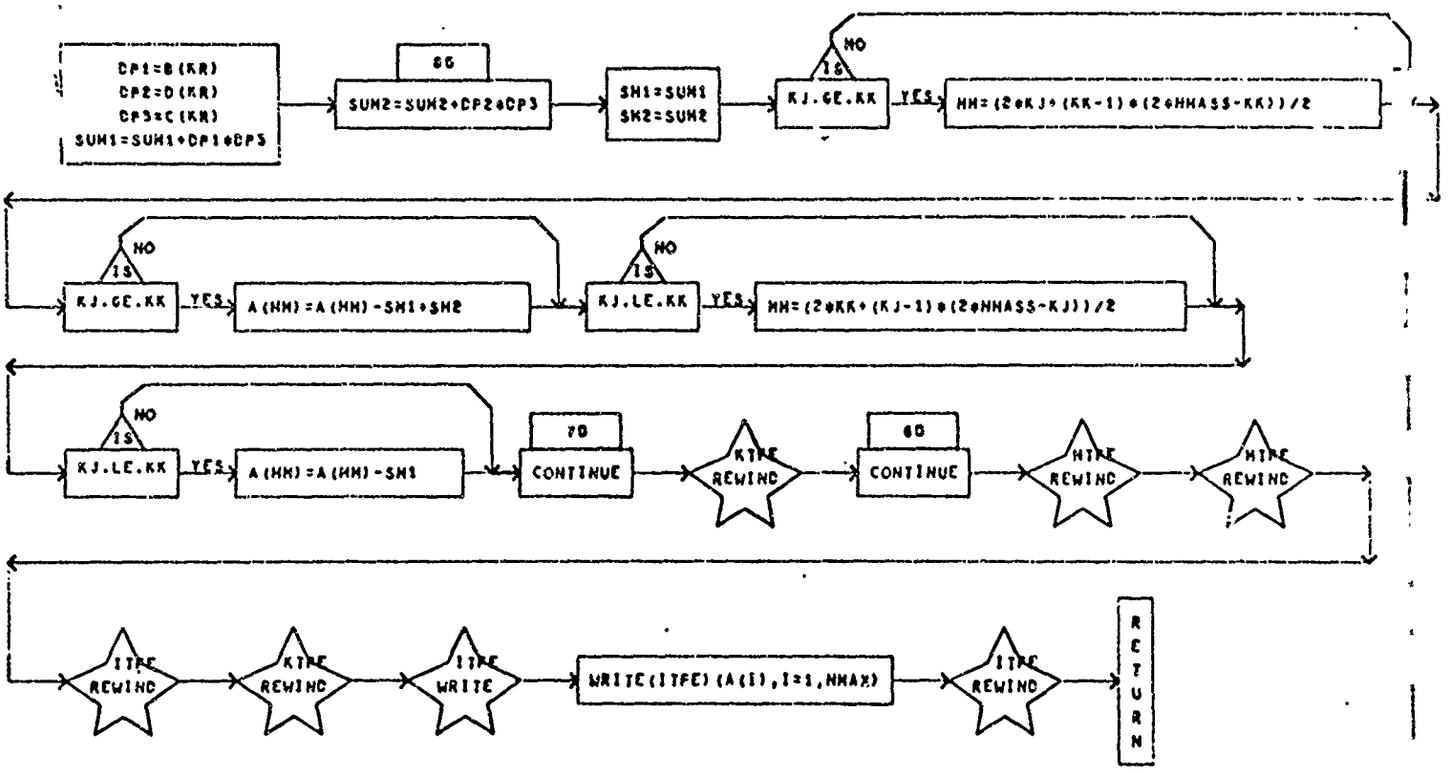
DP1=B(KR)
DP2=D(KR)
DP3=C(KR)
SUM1=SUM1+DP1*DP3
66
SUM2=SUM2+DP2*DP3
SM1=SUM1
SM2=SUM2
NO
IS
KJ.GE.KK
YES
HH=(2*KJ+(KK-1)*(2*NMASS-KK))/2
NO
IS
KJ.GE.KK
YES
A(HH)=A(HH)-SM1+SM2
NO
IS
KJ.LE.KK
YES
HH=(2*KK+(KJ-1)*(2*NMASS-KJ))/2
NO
IS
KJ.LE.KK
YES
A(HH)=A(HH)-SM1
70
CONTINUE
KTPE
REWIND
60
CONTINUE
MTPE
REWIND
NTPE
REWIND
ITPE
REWIND
KTPE
REWIND
ITPE
WRITE
WRITE(ITPE)(A(I),I=1,NMAX)
ITPE
REWIND
RETURN

MATMPY

MULTIPLIES MATRICES A AND B TO GET C, ALL OF ORDER NxN

DIMENSIONED VARIABLES

SYMBOL	STORAGES	SYMBOL	STORAGES	SYMBOL	STORAGES	SYMBOL	STORAGES	SYMBOL	STORAGES
A	9,9	B	9,9	C	9,9				

SUBROUTINE MATMPY(A,B,C,N) PAGE 1.

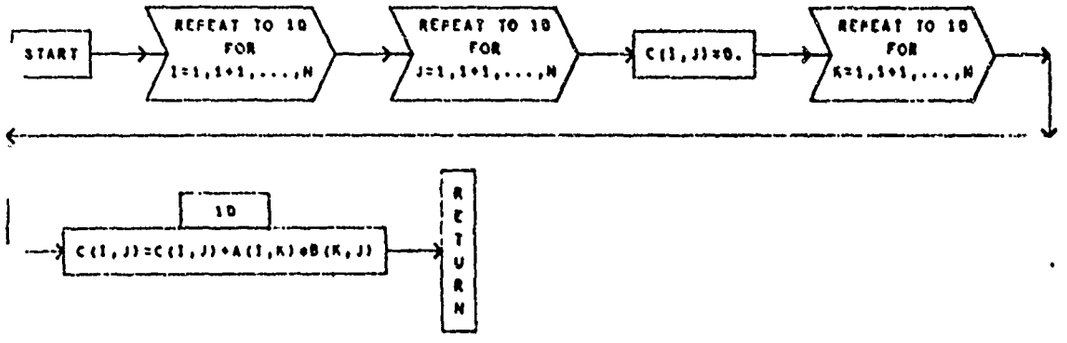

LOOP1

DIMENSIONED VARIABLES

SYMBOL	STORAGES	SYMBOL	STORAGES	SYMBOL	STORAGES	SYMBOL	STORAGES	SYMBOL	STORAGES
AJX	1	AIX	1						

SUBROUTINE LOOP1(JP2,NP1,SCAMPJ,AJX,AIX) PAGE 1

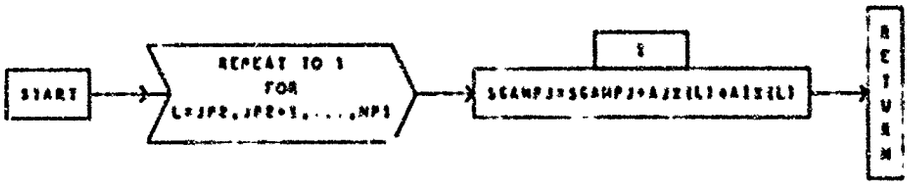

LOOP2

DIMENSIONED VARIABLES

SYMBOL	STORAGES	SYMBOL	STORAGES	SYMBOL	STORAGES	SYMBOL	STORAGES	SYMBOL	STORAGES
A11X	1	A1X	1	S	1				

SUBROUTINE LOOP2(A11X,A1X,S,S1,A11I,IP1,NP1) PAGE 1

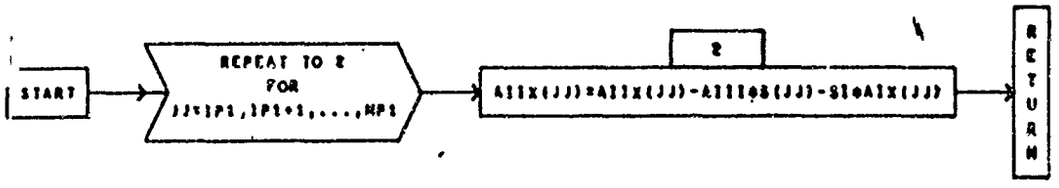

LOOP3

D I M E N S I O N E D V A R I A B L E S

SYMBOL	STORAGES	SYMBOL	STORAGES	SYMBOL	STORAGES	SYMBOL	STORAGES	SYMBOL	STORAGES
AIIX	1	V	1						

SUBROUTINE LOOP3(UTV,AIIX,V,IIP2,NP1) PAGE 1

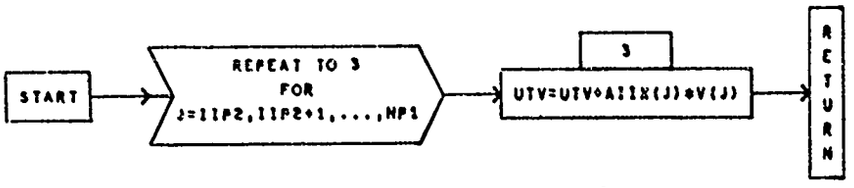

LOOP4

DIMENSIONED VARIABLES

SYMBOL	STORAGES	SYMBOL	STORAGES	SYMBOL	STORAGES	SYMBOL	STORAGES	SYMBOL	STORAGES
AIIX	1	V	1						

SUBROUTINE LOOP4(AIIX,V,NP1,IIP2,UTV) PAGE 1

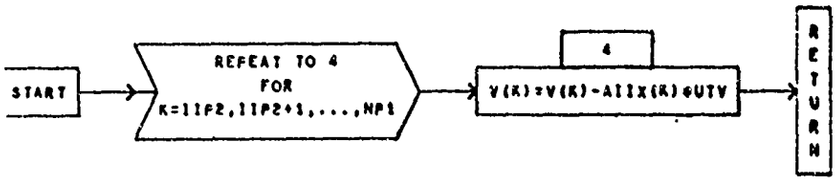

BIGMAT

PROG.AUTHORS M.OLSON AND R.E.FUNDERLIC,CENTRAL DATA PROCESSING,4,1,68

D I M E N S I O N E D V A R I A B L E S

SYMBOL	STORAGES	SYMBOL	STORAGES	SYMBOL	STORAGES	SYMBOL	STORAGES	SYMBOL	STORAGES
A	1	VALU	1	VALL	1	UPPERB	1	DIAG	1
V	1	T	NN,3	INTER	1				

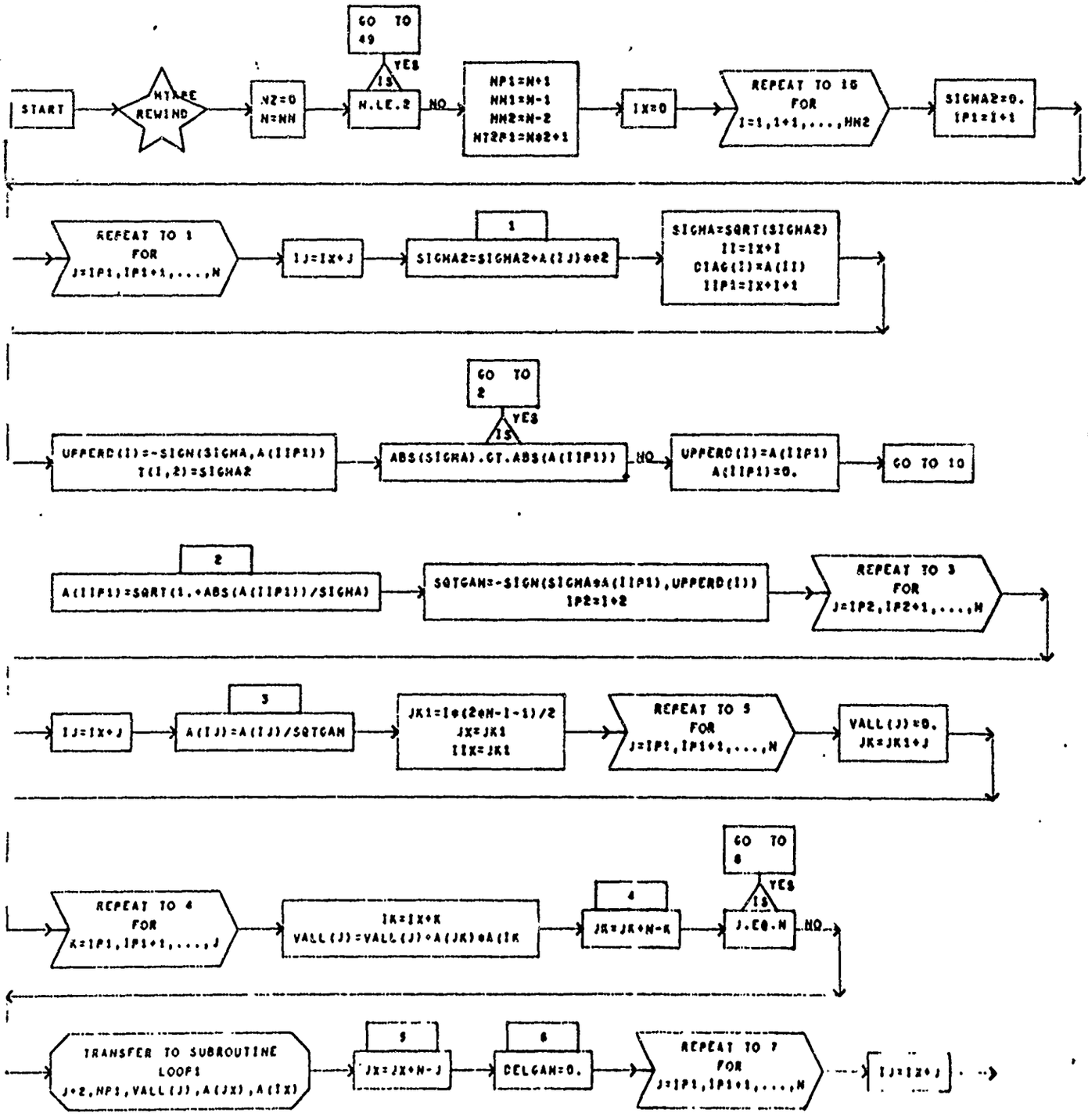
START
MTAPE REWIND
NZ=0
N=NN
GO TO 49
IS N.LE.2 YES
NO
NP1=N+1
NM1=N-1
NM2=N-2
NT2P1=N#2+1
IX=0
REPEAT TO 16 FOR I=1,1+1,...,NM2
SIGMA2=0.
IP1=I+1
REPEAT TO 1 FOR J=IP1,IP1+1,...,N
IJ=IX+J
1
SIGMA2=SIGMA2+A(IJ)**2
SIGMA=SQRT(SIGMA2)
II=IX+I
DIAG(I)=A(II)
IIP1=IX+I+1
GO TO 2
IS ABS(SIGMA).GT.ABS(A(IIP1)) NO
UPPERD(I)=-SIGN(SIGMA,A(IIP1))
T(I,2)=SIGMA2
UPPERD(I)=A(IIP1)
A(IIP1)=0.
GO TO 10
2
A(IIP1)=SQRT(1.+ABS(A(IIP1))/SIGMA)
SQTGAM=-SIGN(SIGMA#A(IIP1),UPPERD(I))
IP2=I+2
REPEAT TO 3 FOR J=IP2,IP2+1,...,N
IJ=IX+J
3
A(IJ)=A(IJ)/SQTGAM
JK1=I#(2#N-I-1)/2
JX=JK1
IIX=JK1
REPEAT TO 9 FOR J=IP1,IP1+1,...,N
VALL(J)=0.
JK=JK1+J
GO TO 8
REPEAT TO 4 FOR K=IP1,IP1+1,...,J
IK=IX+K
VALL(J)=VALL(J)+A(JK)#A(IK
4
JK=JK+N-K
IS J.EQ.N YES
NO
TRANSFER TO SUBROUTINE LOOP1 J=2,NP1,VALL(J),A(JX),A(IX)
5
JX=JX+N-J
6
DELGAM=0.
REPEAT TO 7 FOR J=IP1,IP1+1,...,N
IJ=IX+J

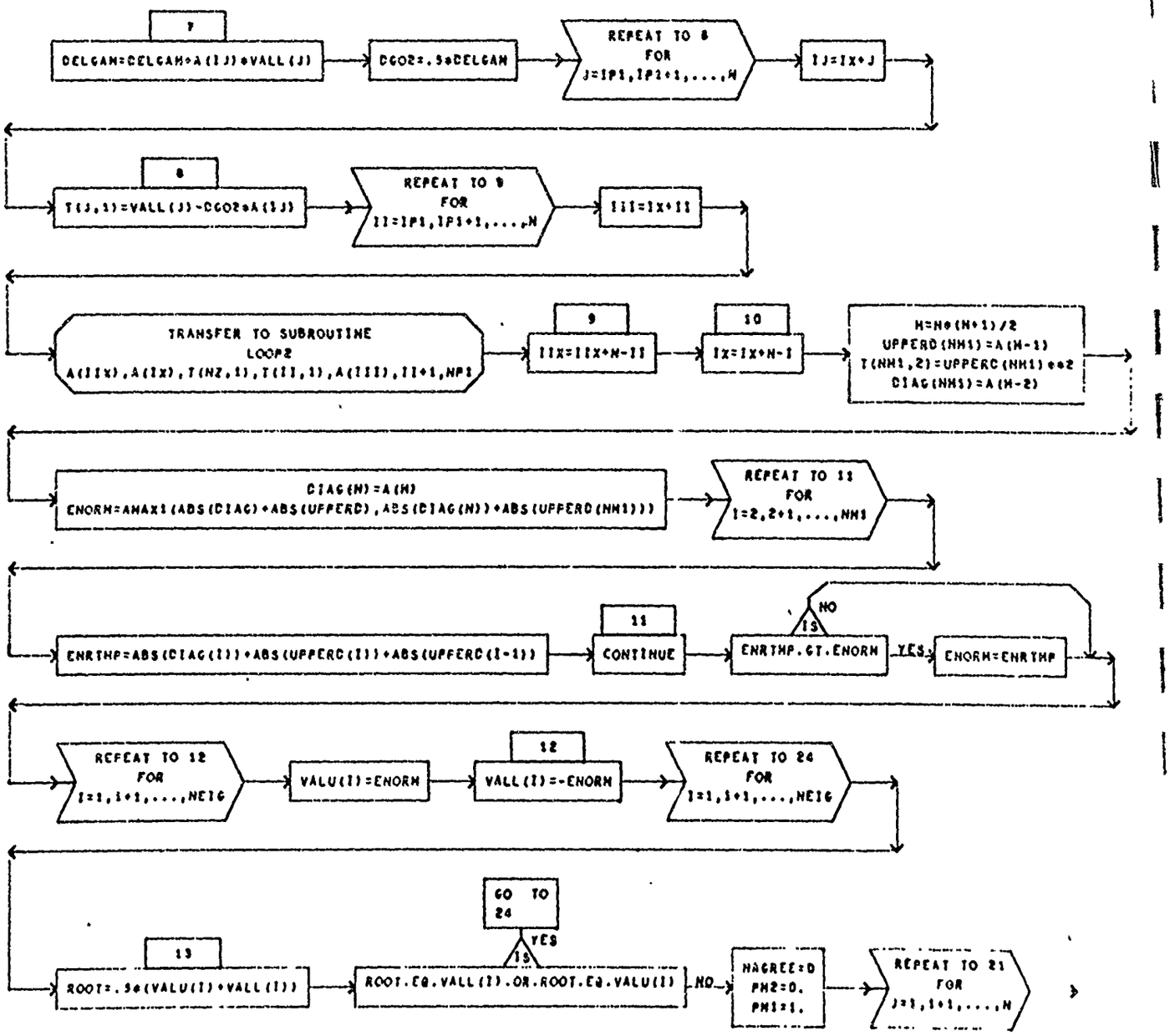
7
DELGAM=DELGAM+A(IJ)*VALL(J)
DGO2=.5*DELGAM
REPEAT TO 8
FOR
J=IP1,IP1+1,...,N
IJ=IX+J
8
T(J,1)=VALL(J)-DGO2*A(IJ)
REPEAT TO 9
FOR
II=IP1,IP1+1,...,N
III=IX+II
TRANSFER TO SUBROUTINE
LOOP2
A(IIX),A(IX),T(NZ,1),T(II,1),A(III),II+1,NP1
9
IIX=IIX+N-II
10
IX=IX+N-I
H=N*(N+1)/2
UPPERD(NN1)=A(N-1)
T(NN1,2)=UPPERD(NN1)**2
DIAG(NN1)=A(N-2)
DIAG(N)=A(N)
ENORM=AMAX1(ABS(DIAG)+ABS(UPPERD),ABS(DIAG(N))+ABS(UPPERD(NN1)))
REPEAT TO 11
FOR
I=2,2+1,...,NN1
ENRTHP=ABS(DIAG(I))+ABS(UPPERD(I))+ABS(UPPERD(I-1))
11
CONTINUE
IS
NO
ENRTHP.GT.ENORM
YES
ENORM=ENRTHP
REPEAT TO 12
FOR
I=1,1+1,...,NEIG
VALU(I)=ENORM
12
VALL(I)=-ENORM
REPEAT TO 24
FOR
I=1,1+1,...,NEIG
GO TO
24
YES
IS
13
ROOT=.5*(VALU(I)+VALL(I))
ROOT.EQ.VALL(I).OR.ROOT.EQ.VALU(I)
NO
NAGREE=0
PM2=0.
PM1=1.
REPEAT TO 21
FOR
J=1,1+1,...,N

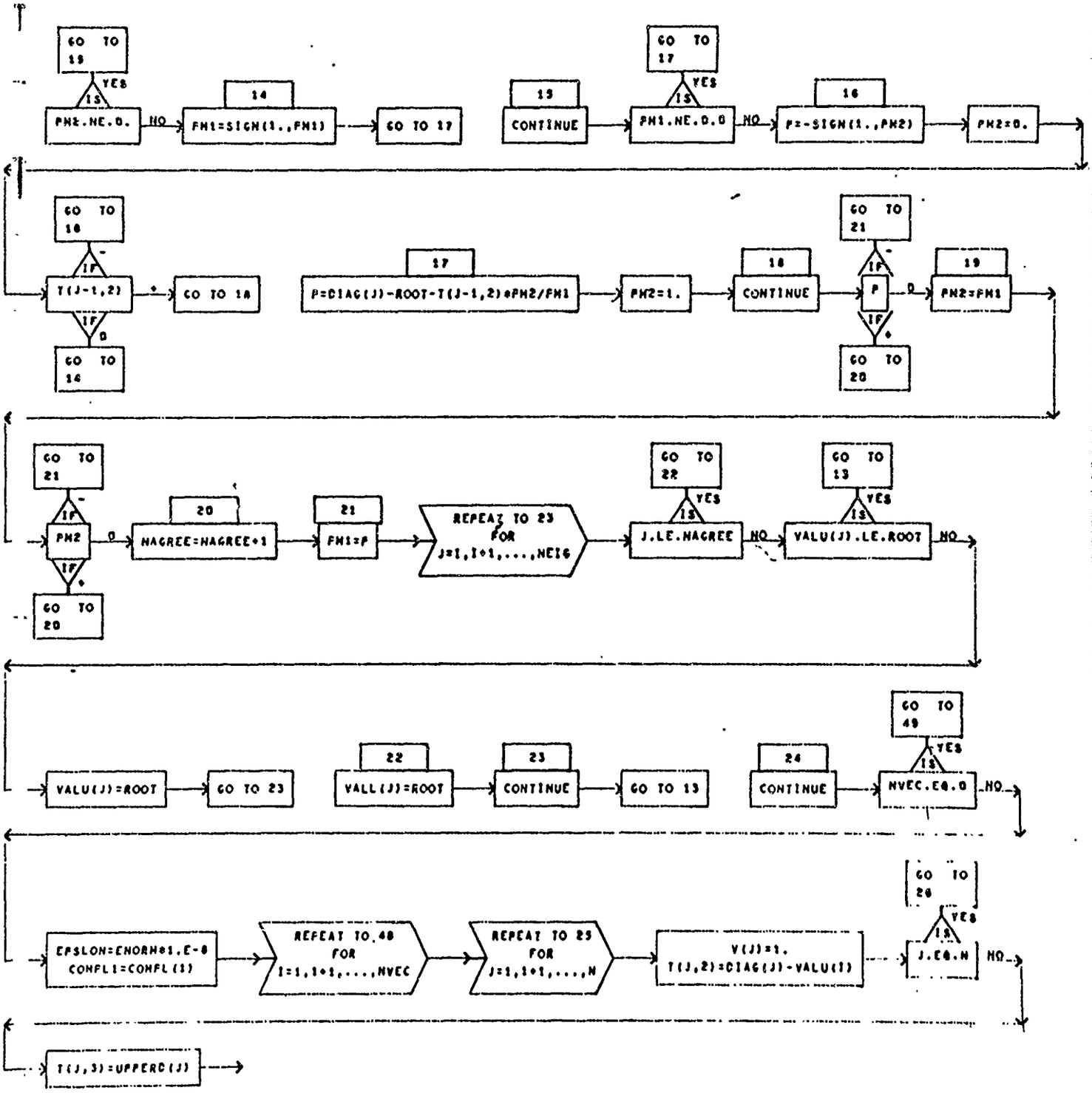
GO TO 15
IS YES
PH2.NE.0.
NO
14
PH1=SIGN(1.,PH1)
GO TO 17
15
CONTINUE
GO TO 17
IS YES
PH1.NE.0.0
NO
16
P=-SIGN(1.,PH2)
PH2=0.
GO TO 18
IF -
T(J-1,2)
+
GO TO 18
IF 0
GO TO 14
17
P=DIAG(J)-ROOT-T(J-1,2)*PH2/PH1
PH2=1.
18
CONTINUE
GO TO 21
IF -
P
0
19
PH2=PH1
IF +
GO TO 20
GO TO 21
IF -
PH2
0
20
NAGREE=NAGREE+1
21
PH1=P
IF +
GO TO 20
REPEAT TO 23
FOR
J=1,1+1,...,NEIG
GO TO 22
IS YES
J.LE.NAGREE
NO
GO TO 13
IS YES
VALU(J).LE.ROOT
NO
VALU(J)=ROOT
GO TO 23
22
VALL(J)=ROOT
23
CONTINUE
GO TO 13
24
CONTINUE
GO TO 49
IS YES
NVEC.EQ.0
NO
EPSLON=ENORM*1.E-8
CONFL1=CONFL(1)
REPEAT TO 48
FOR
I=1,1+1,...,NVEC
REPEAT TO 25
FOR
J=1,1+1,...,N
V(J)=1.
T(J,2)=DIAG(J)-VALU(I)
GO TO 26
IS YES
J.EQ.N
NO
T(J,3)=UPPERD(J)

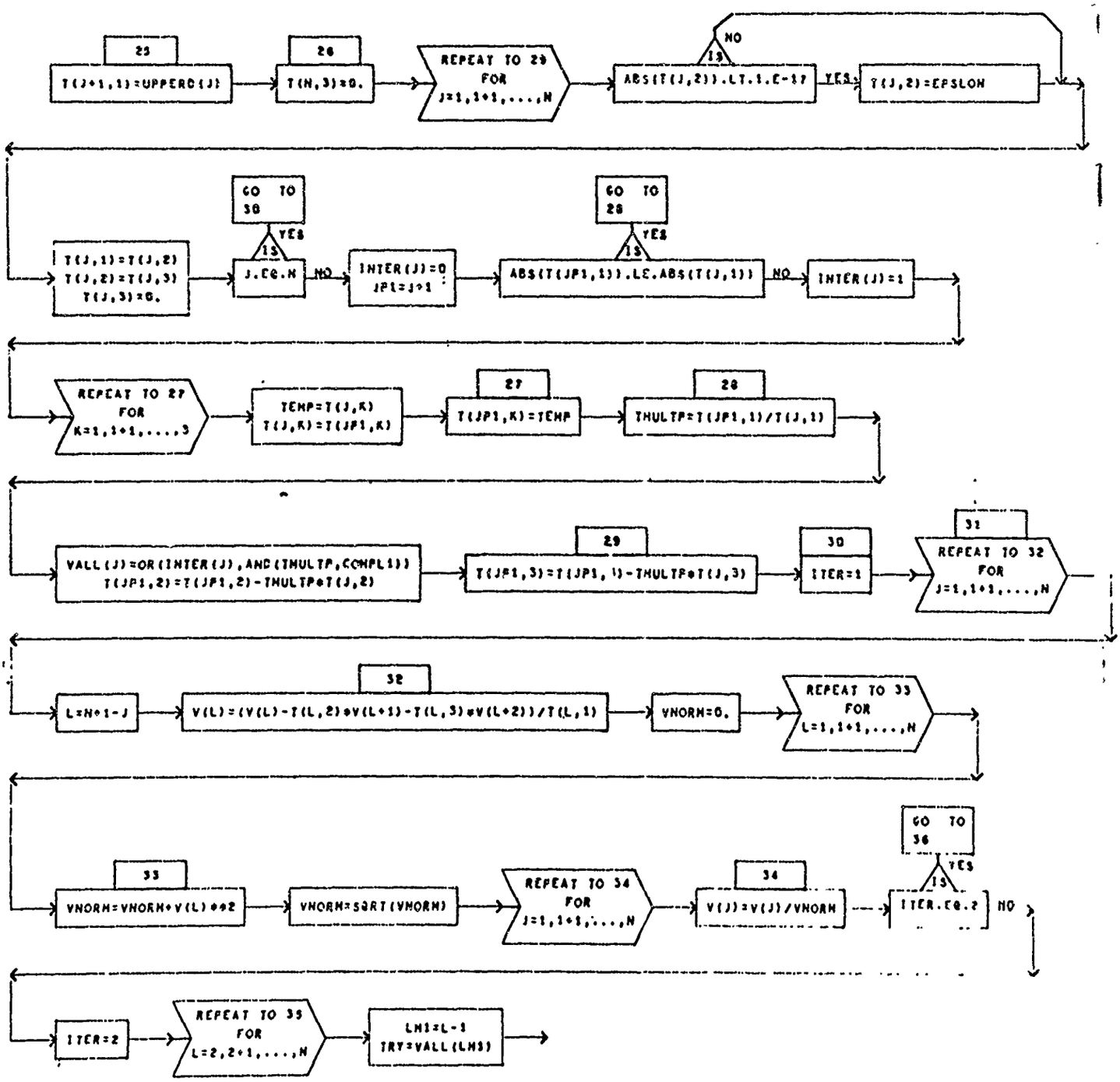
25
T(J+1,1)=UPPERD(J)
26
T(N,3)=0.
REPEAT TO 29 FOR J=1,1+1,...,N
IS
NO
ABS(T(J,2)).LT.1.E-17
YES
T(J,2)=EPSLON
GO TO 30
YES
IS
T(J,1)=T(J,2)
T(J,2)=T(J,3)
T(J,3)=0.
J.EQ.N
NO
INTER(J)=0
JP1=J+1
GO TO 28
YES
IS
ABS(T(JP1,1)).LE.ABS(T(J,1))
NO
INTER(J)=1
REPEAT TO 27 FOR K=1,1+1,...,3
TEMP=T(J,K)
T(J,K)=T(JP1,K)
27
T(JP1,K)=TEMP
28
THULTP=T(JP1,1)/T(J,1)
VALL(J)=OR(INTER(J),AND(THULTP,COMPL1))
T(JP1,2)=T(JP1,2)-THULTP*T(J,2)
29
T(JP1,3)=T(JP1,1)-THULTP*T(J,3)
30
ITER=1
31
REPEAT TO 32 FOR J=1,1+1,...,N
L=N+1-J
32
V(L)=(V(L)-T(L,2)*V(L+1)-T(L,3)*V(L+2))/T(L,1)
VNORM=0.
REPEAT TO 33 FOR L=1,1+1,...,N
33
VNORM=VNORM+V(L)**2
VNORM=SQRT(VNORM)
REPEAT TO 34 FOR J=1,1+1,...,N
34
V(J)=V(J)/VNORM
GO TO 36
YES
IS
ITER.EQ.2
NO
ITER=2
REPEAT TO 35 FOR L=2,2+1,...,N
LM1=L-1
TRY=VALL(LM1)

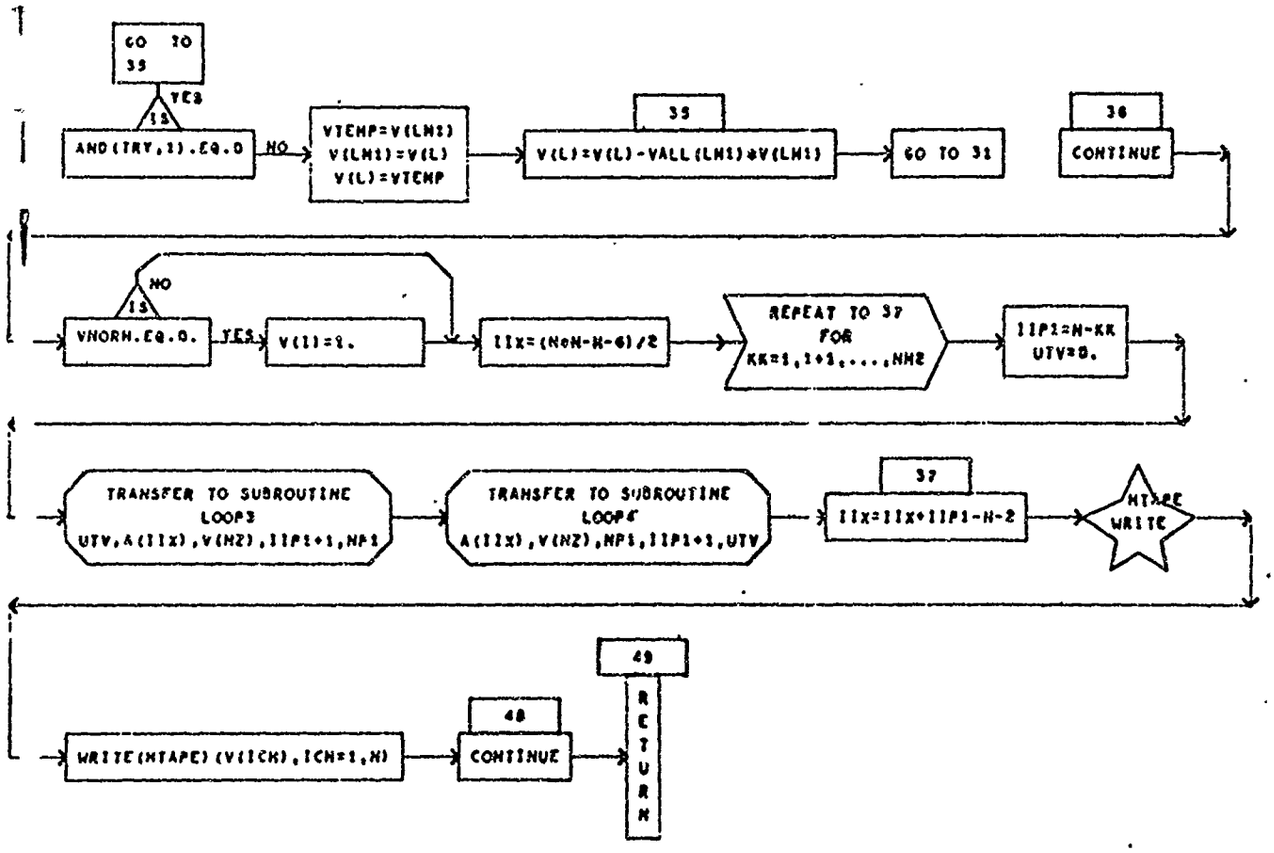
GO TO 35
YES
IS
AND(TRY,I).EQ.0
NO
VTEMP=V(LM1)
V(LM1)=V(L)
V(L)=VTEMP
35
V(L)=V(L)-VALL(LM1)*V(LM1)
GO TO 31
36
CONTINUE
NO
IS
VNORM.EQ.0.
YES
V(I)=0.
IIX=(N*N-N-6)/2
REPEAT TO 37
FOR
KK=1,1+1,...,NM2
IIP1=N-KK
UTV=0.
TRANSFER TO SUBROUTINE
LOOP3
UTV,A(IIX),V(NZ),IIP1+1,NP1
TRANSFER TO SUBROUTINE
LOOP4
A(IIX),V(NZ),NP1,IIP1+1,UTV
37
IIX=IIX+IIP1-N-2
NTAPE
WRITE
49
RETURN
48
CONTINUE
WRITE(NTAPE)(V(ICH),ICH=1,N)

SYMINV

A IS THE UPPER TRIANGLE OF THE SYMMETRIC MATRIX TO BE INVERTED.

ELEMENTS ARE STORED ROWWISE.

N = ORDER OF MATRIX

PROGRAM INVERTS IN PLACE.

D I M E N S I O N E D V A R I A B L E S

SYMBOL	STORAGES	SYMBOL	STORAGES	SYMBOL	STORAGES	SYMBOL	STORAGES	SYMBOL	STORAGES
A	1								

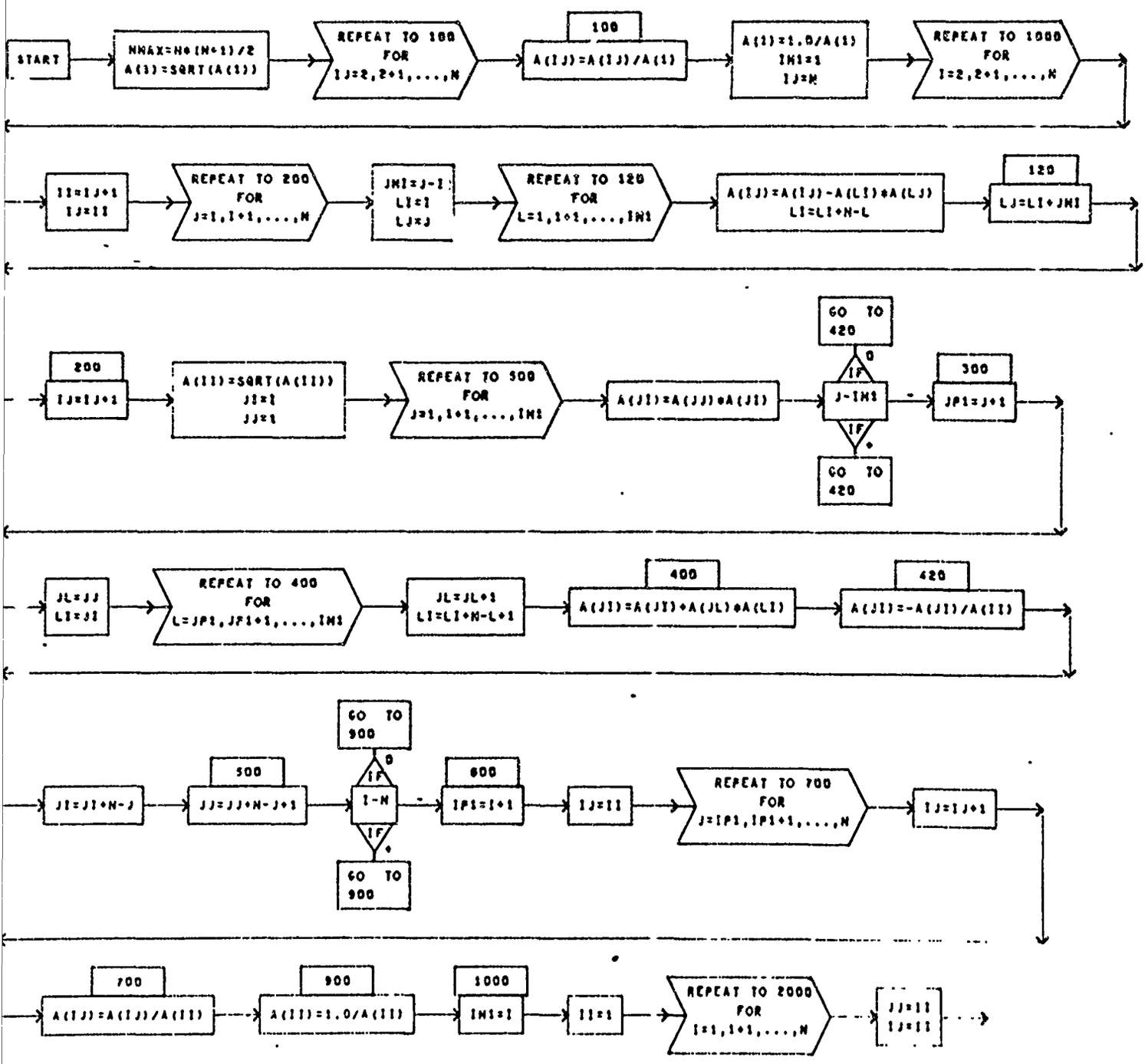
START
NMAX=N*(N+1)/2
A(1)=SQRT(A(1))
REPEAT TO 100
FOR
IJ=2,2+1,...,N
100
A(IJ)=A(IJ)/A(1)
A(1)=1.0/A(1)
IN1=1
IJ=N
REPEAT TO 1000
FOR
I=2,2+1,...,N
II=IJ+1
IJ=II
REPEAT TO 200
FOR
J=1,I+1,...,N
JN1=J-I
LI=I
LJ=J
REPEAT TO 120
FOR
L=1,1+1,...,IN1
A(IJ)=A(IJ)-A(LI)*A(LJ)
LI=LI+N-L
120
LJ=LI+JN1
200
IJ=IJ+1
A(II)=SQRT(A(II))
JI=I
JJ=I
REPEAT TO 500
FOR
J=1,1+1,...,IN1
A(JI)=A(JJ)*A(JI)
GO TO
420
IF
0
J-IN1
IF
+
GO TO
420
300
JP1=J+1
JL=JJ
LI=JI
REPEAT TO 400
FOR
L=JP1,JP1+1,...,IN1
JL=JL+1
LI=LI+N-L+1
400
A(JI)=A(JI)+A(JL)*A(LI)
420
A(JI)=-A(JI)/A(II)
JI=JI+N-J
500
JJ=JJ+N-J+1
I-N
IF
0
IF
+
GO TO
900
GO TO
900
600
IP1=I+1
IJ=II
REPEAT TO 700
FOR
J=IP1,IP1+1,...,N
IJ=IJ+1
700
A(IJ)=A(IJ)/A(II)
900
A(II)=1.0/A(II)
1000
IN1=1
II=1
REPEAT TO 2000
FOR
I=1,1+1,...,N
JJ=II
IJ=II

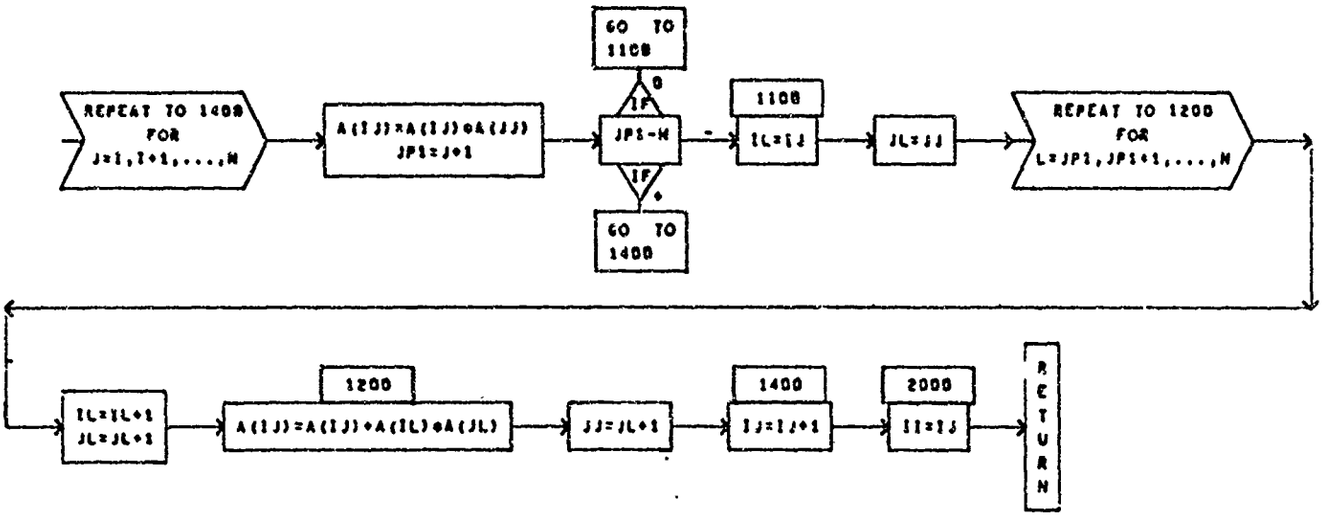
GO TO 1100
0
IF
REPEAT TO 1400 FOR J=I,I+1,...,N
A(I,J)=A(I,J)÷A(J,J)
JP1=J+1
JP1-N
IF
+
GO TO 1400
1100
IL=IJ
JL=JJ
REPEAT TO 1200 FOR L=JP1,JP1+1,...,N
IL=IL+1
JL=JL+1
1200
A(IJ)=A(IJ)-A(IL)÷A(JL)
JJ=JL+1
1400
IJ=IJ+1
2000
II=IJ
RETURN

EIGMAT

THIS SUBROUTINE FINDS THE EIGENVALUES AND EIGENVECTORS FOR SYMMETRIC MASS AND STIFFNESS MATRICES.

THE ARGUMENTS ARE--

N- ORDER OF MATRICES.

A- DUMMY VECTOR WITH DIMENSION IN MAIN PROGRAM OF N*(N+1)/2

VALU- STORAGE FOR EIGENVALUES MUST BE DIMENSIONED IN THE MAIN PROGRAM AS A VECTOR OF LENGTH NEIG.

TEMP,B,C,D,- DUMMY VECTORS WITH DIMENSION OF N IN MAIN PROGRAM.

E- DUMMY ARRAY WITH DIMENSIONS OF (N,3) IN MAIN PROGRAM.

IDUM- DUMMY INTEGER VECTOR WITH DIMENSION OF N IN MAIN PROGRAM.

MTAPE- TAPE WHERE STIFFNESS MATRIX IS STORED IN COMPACT FORM.

NTAPE- TAPE WHERE MASS MATRIX IS STORED IN COMPACT FORM.

JTAPE,ITAPE- SCRATCH TAPES.

NEIG- NUMBER OF EIGENVALUES DESIRED.

NVEC- NUMBER OF EIGENVECTORS DESIRED. MUST BE EQUAL TO OR LESS THAN NEIG.

THE MASS AND STIFFNESS MATRICES ARE STORED IN COMPACT FORM AS VECTORS. ONLY THE UPPER TRIANGLE OF THESE MATRICES(BY ROWS) IS STORED.

D I M E N S I O N E D V A R I A B L E S

SYMBOL	STORAGES	SYMBOL	STORAGES	SYMBOL	STORAGES	SYMBOL	STORAGES	SYMBOL	STORAGES
A	1	TEMP	1	VALU	1	B	1	C	1
D	1	E	N,3	IDUM	1				

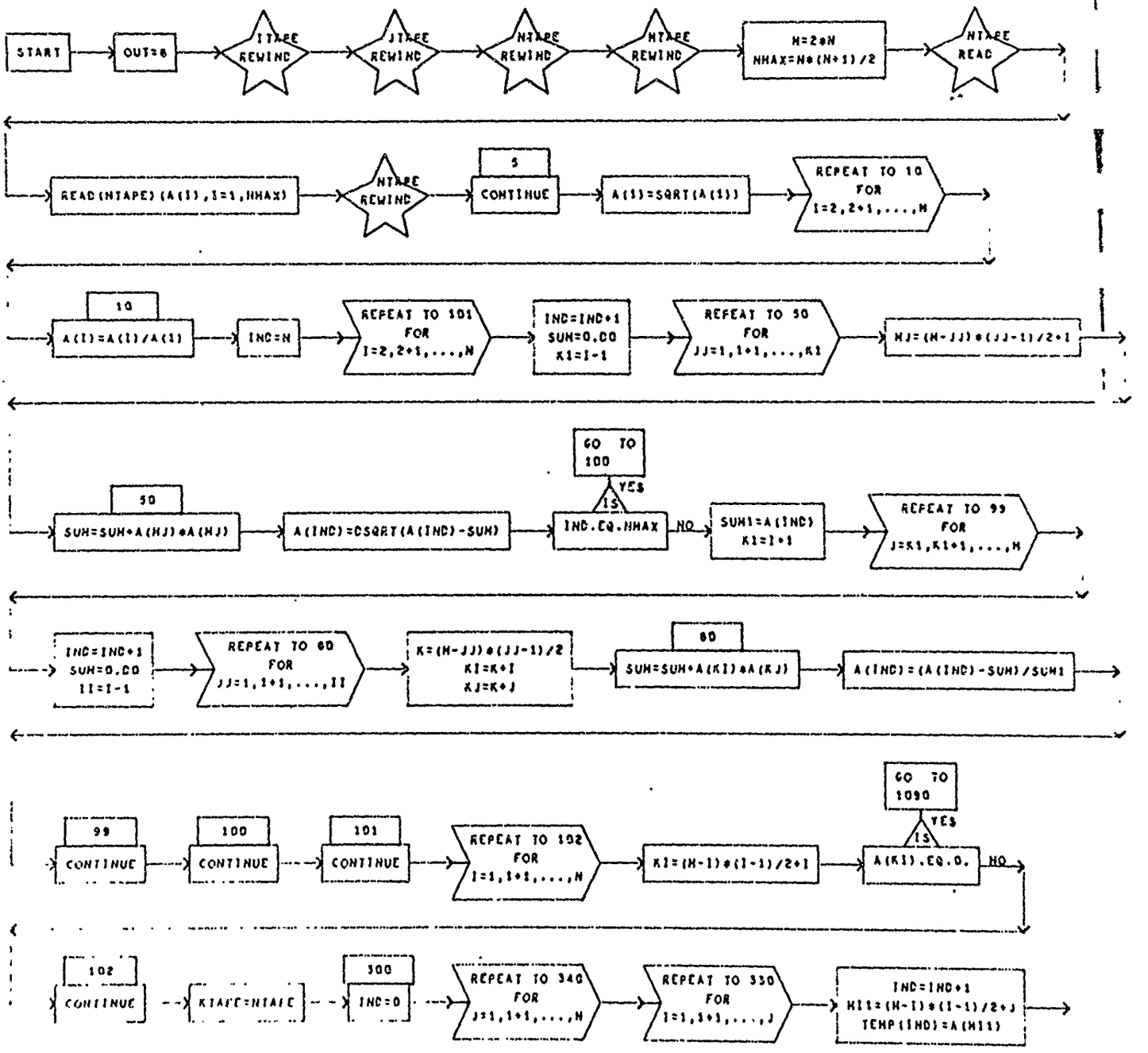
START
OUT=6
ITAPE REWIND
JTAPE REWIND
NTAPE REWIND
MTAPE REWIND
M=2*N
NMAX=N*(N+1)/2
NTAPE READ
READ(NTAPE)(A(I),I=1,NMAX)
NTAPE REWIND
5
CONTINUE
A(1)=SQRT(A(1))
REPEAT TO 10 FOR I=2,2+1,...,N
10
A(I)=A(I)/A(1)
INC=N
REPEAT TO 101 FOR I=2,2+1,...,N
INC=INC+1
SUM=0.00
K1=I-1
REPEAT TO 50 FOR JJ=1,1+1,...,K1
MJ=(M-JJ)*(JJ-1)/2+I
50
SUM=SUM+A(MJ)*A(MJ)
A(INC)=DSQRT(A(INC)-SUM)
GO TO 100
IS
INC.EQ.NMAX
NO
YES
SUM1=A(INC)
K1=I+1
REPEAT TO 99 FOR J=K1,K1+1,...,N
INC=INC+1
SUM=0.00
II=I-1
REPEAT TO 60 FOR JJ=1,1+1,...,II
K=(M-JJ)*(JJ-1)/2
KI=K+I
KJ=K+J
60
SUM=SUM+A(KI)*A(KJ)
A(INC)=(A(INC)-SUM)/SUM1
GO TO 1090
IS
A(KI).EQ.0.
NO
YES
99
CONTINUE
100
CONTINUE
101
CONTINUE
REPEAT TO 102 FOR I=1,1+1,...,N
KI=(M-1)*(I-1)/2+I
102
CONTINUE
KTAPE=NTAPE
300
INC=0
REPEAT TO 340 FOR J=1,1+1,...,N
REPEAT TO 330 FOR I=1,1+1,...,J
INC=INC+1
MI1=(M-I)*(I-1)/2+J
TEMP(INC)=A(MI1)

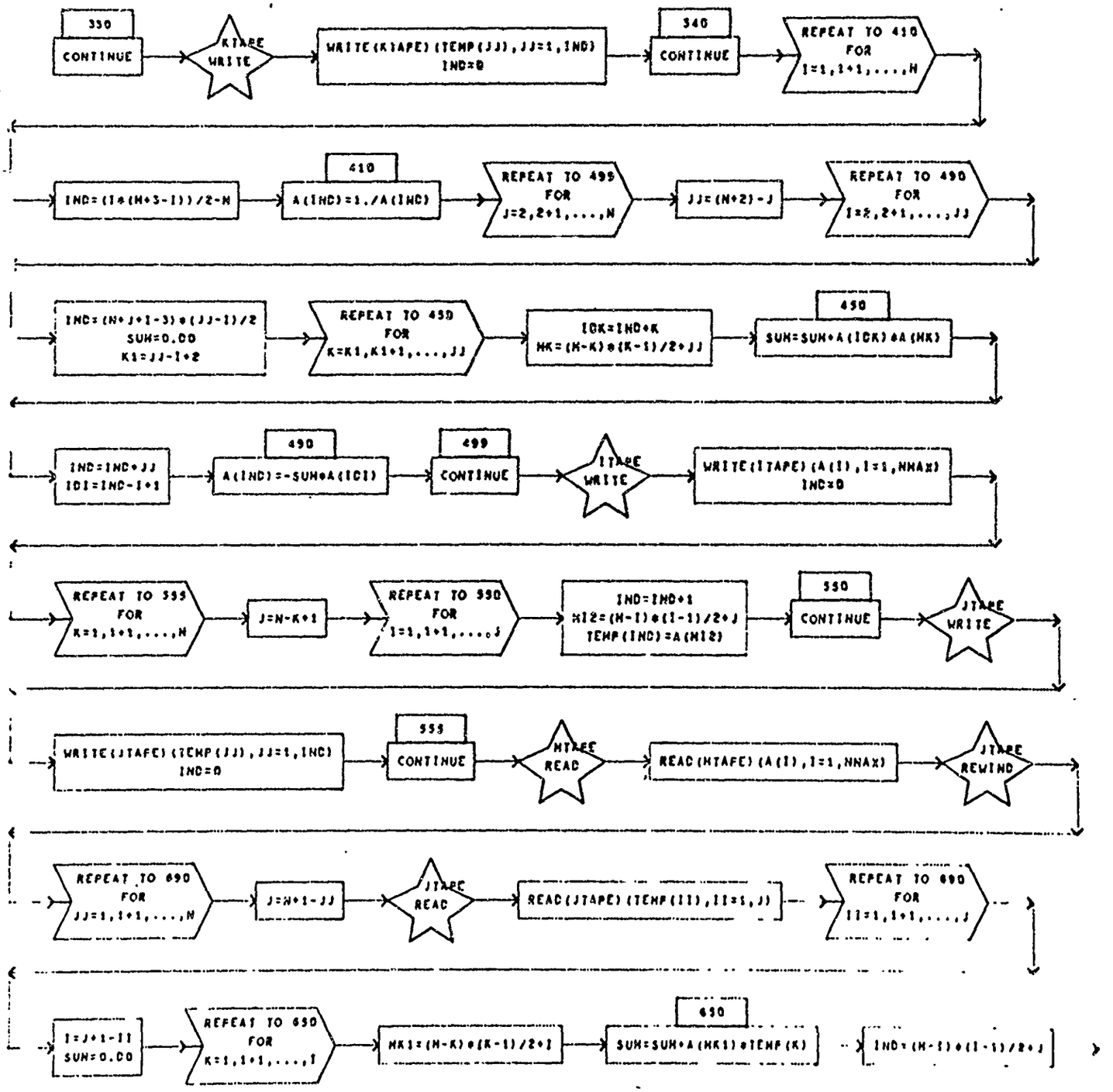
330
CONTINUE
KTAPE WRITE
WRITE(KTAPE)(TEMP(JJ),JJ=1,IND)
IND=0
340
CONTINUE
REPEAT TO 410 FOR I=1,1+1,...,N
IND=(I*(N+N-I))/2-N
410
A(IND)=1./A(IND)
REPEAT TO 499 FOR J=2,2+1,...,N
JJ=(N+2)-J
REPEAT TO 490 FOR I=2,2+1,...,JJ
IND=(N+J+I-3)*(JJ-1)/2
SUM=0.00
K1=JJ-I+2
REPEAT TO 450 FOR K=K1,K1+1,...,JJ
IDK=IND+K
MK=(N-K)*(K-1)/2+JJ
450
SUM=SUM+A(IDK)*A(MK)
IND=IND+JJ
IDI=IND-I+1
490
A(IND)=-SUM*A(IDI)
499
CONTINUE
ITAPE WRITE
WRITE(ITAPE)(A(I),I=1,NNAX)
IND=0
REPEAT TO 555 FOR K=1,1+1,...,N
J=N-K+1
REPEAT TO 550 FOR I=1,1+1,...,J
IND=IND+1
MI2=(N-I)*(I-1)/2+J
TEMP(IND)=A(MI2)
550
CONTINUE
JTAPE WRITE
WRITE(JTAPE)(TEMP(JJ),JJ=1,IND)
IND=0
555
CONTINUE
MTAPE READ
READ(MTAPE)(A(I),I=1,NNAX)
JTAPE REWIND
REPEAT TO 690 FOR JJ=1,1+1,...,N
J=N+1-JJ
JTAPE READ
READ(JTAPE)(TEMP(II),II=1,J)
REPEAT TO 690 FOR II=1,1+1,...,J
I=J+1-II
SUM=0.00
REPEAT TO 650 FOR K=1,1+1,...,I
MK1=(N-K)*(K-1)/2+I
650
SUM=SUM+A(MK1)*TEMP(K)
IND=(N-I)*(I-1)/2+J

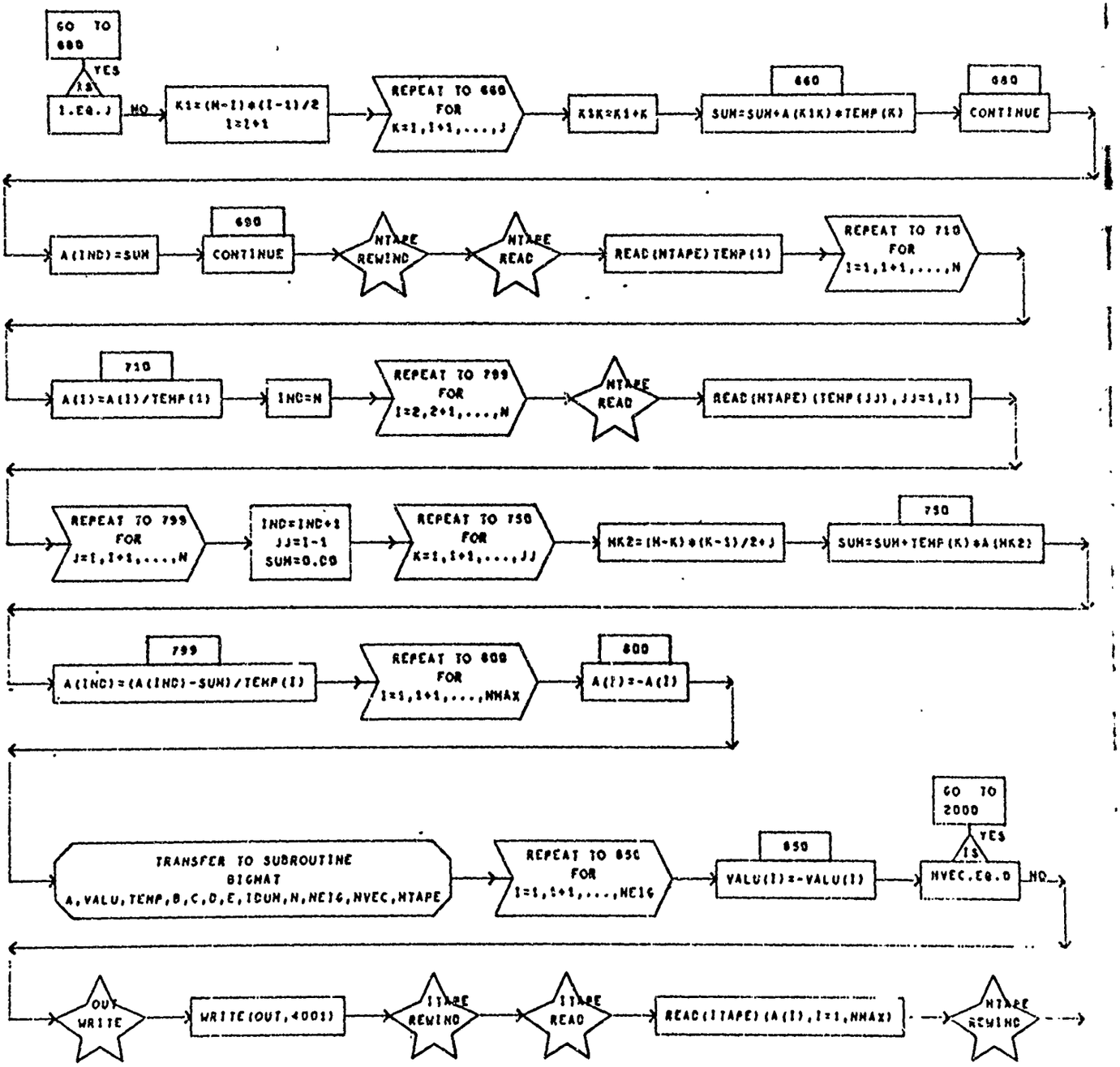
GO TO 699
IS
YES
1.EQ.J
NO
K1=(N-I)*(I-1)/2
I=I+1
REPEAT TO 660 FOR K=I,I+1,...,J
K1K=K1+K
660
SUM=SUM+A(K1K)*TEMP(K)
680
CONTINUE
A(IND)=SUM
690
CONTINUE
NTAPE REWIND
NTAPE READ
READ(NTAPE)TEMP(1)
REPEAT TO 710 FOR I=1,I+1,...,N
710
A(I)=A(I)/TEMP(1)
INC=N
REPEAT TO 799 FOR I=2,2+1,...,N
NTAPE READ
READ(NTAPE)(TEMP(JJ),JJ=1,I)
REPEAT TO 799 FOR J=I,I+1,...,N
INC=INC+1
JJ=I-1
SUM=0.00
REPEAT TO 750 FOR K=1,I+1,...,JJ
MK2=(M-K)*(K-1)/2+J
750
SUM=SUM+TEMP(K)*A(MK2)
799
A(INC)=(A(INC)-SUM)/TEMP(I)
REPEAT TO 800 FOR I=1,I+1,...,NMAX
800
A(I)=-A(I)
TRANSFER TO SUBROUTINE BIGMAT A,VALU,TEMP,B,C,D,E,IDUM,N,NC16,NVEC,NTAPE
REPEAT TO 850 FOR I=1,I+1,...,NC16
850
VALU(I)=-VALU(I)
GO TO 2000
IS
YES
NVEC.EQ.0
NO
OUT WRITE
WRITE(OUT,4001)
ITAPE REWIND
ITAPE READ
READ(ITAPE)(A(I),I=1,NMAX)
NTAPE REWIND

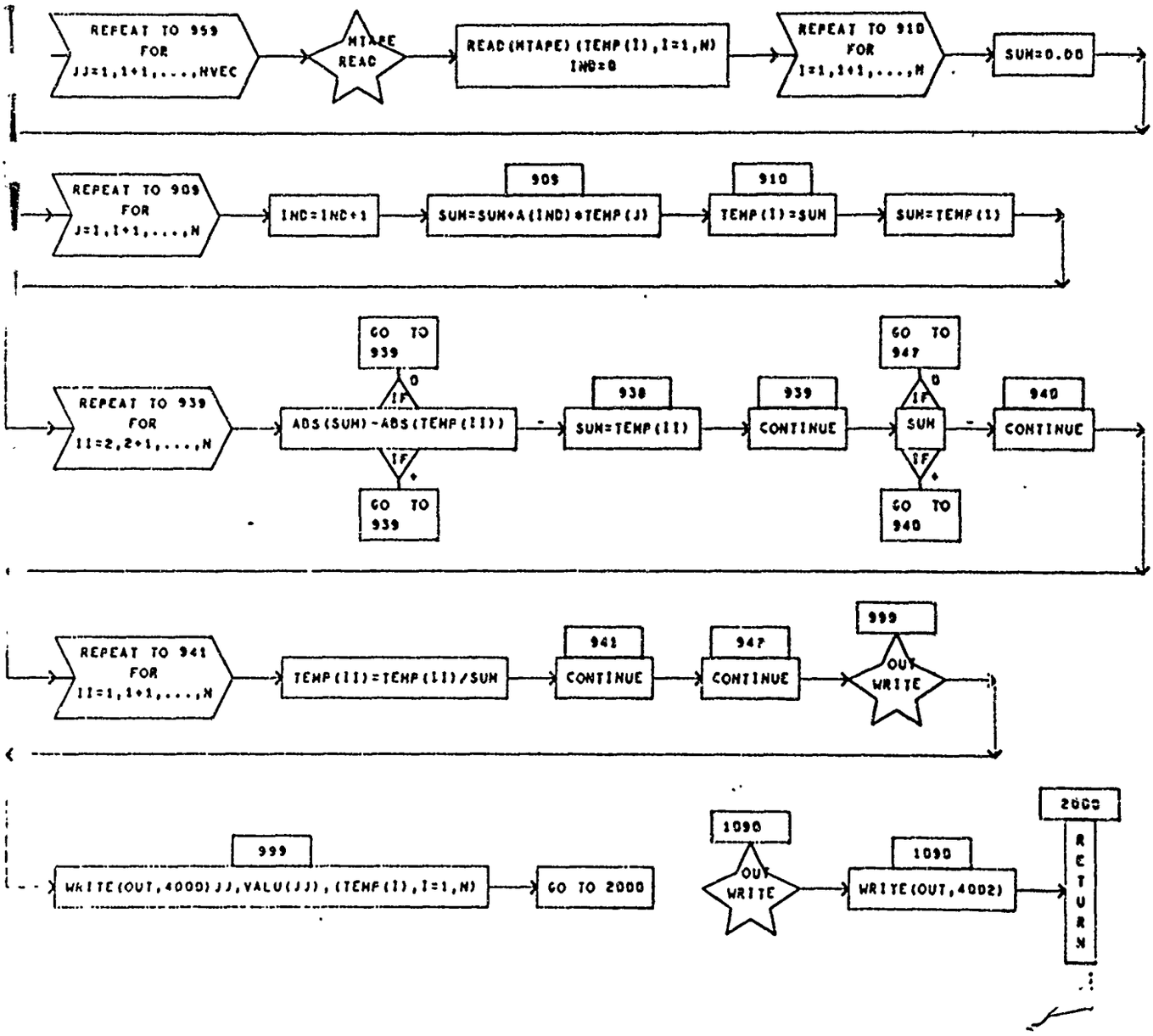
REPEAT TO 959
FOR
JJ=1,1+1,...,NVEC
MTAPE
READ
READ(MTAPE)(TEMP(I),I=1,N)
INC=0
REPEAT TO 910
FOR
I=1,1+1,...,N
SUM=0.00
REPEAT TO 909
FOR
J=1,1+1,...,N
INC=INC+1
909
SUM=SUM+A(IND)*TEMP(J)
910
TEMP(I)=SUM
SUM=TEMP(I)
REPEAT TO 939
FOR
II=2,2+1,...,N
GO TO 939
IF -
ABS(SUM)-ABS(TEMP(II))
IF +
GO TO 939
938
SUM=TEMP(II)
939
CONTINUE
GO TO 947
IF -
SUM
IF +
GO TO 940
940
CONTINUE
REPEAT TO 941
FOR
II=1,1+1,...,N
TEMP(II)=TEMP(II)/SUM
941
CONTINUE
947
CONTINUE
999
OUT
WRITE
999
WRITE(OUT,4000)JJ,VALU(JJ),(TEMP(I),I=1,N)
GO TO 2000
1090
OUT
WRITE
1090
WRITE(OUT,4002)
2000
RETURN

PLYMP 12/63

POLYNOMIAL MULTIPLY

DIMENSIONED VARIABLES

SYMBOL	STORAGES	SYMBOL	STORAGES	SYMBOL	STORAGES	SYMBOL	STORAGES	SYMBOL	STORAGES
A	1	B	1	C	1				

SUBROUTINE PLYMP(A,L,B,M,C,N) PAGE 1

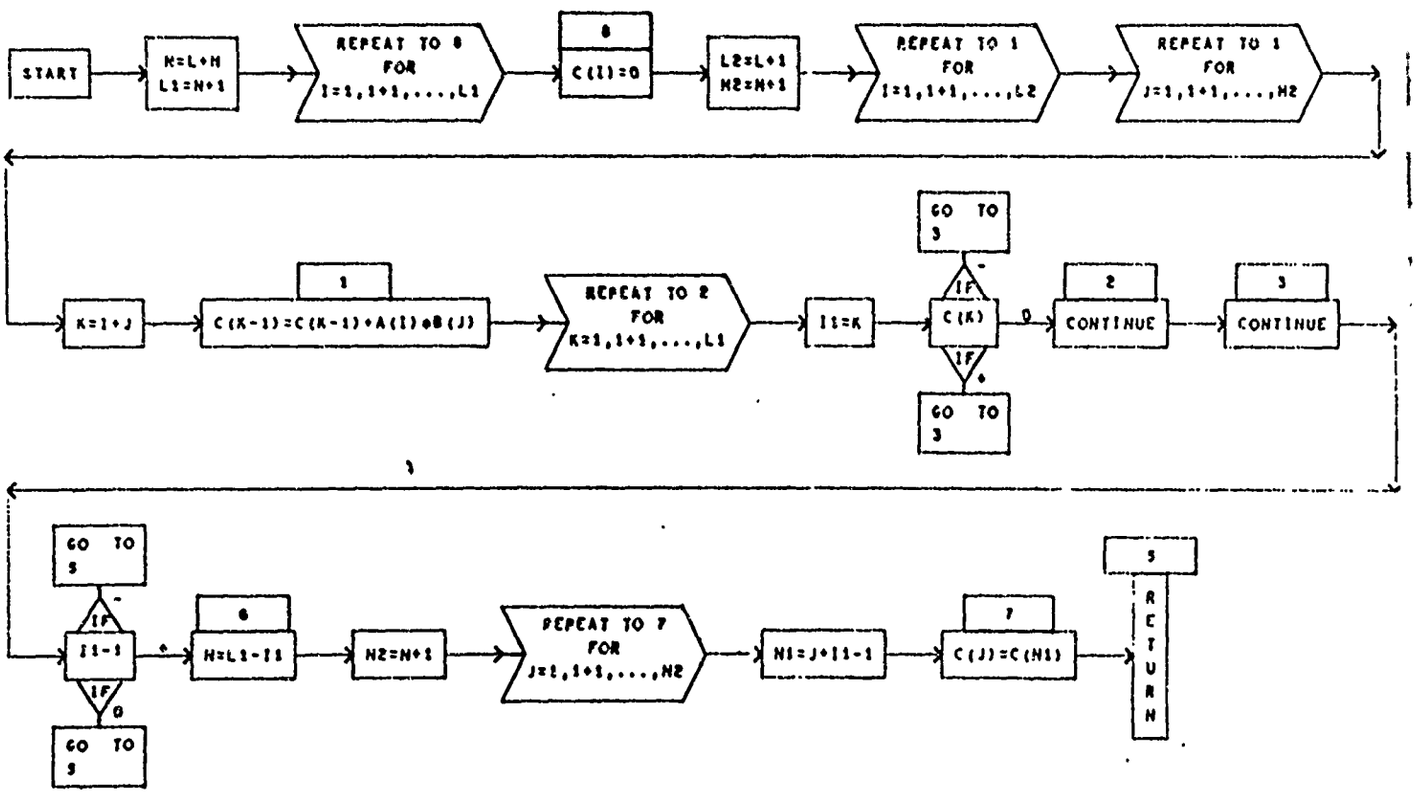

APPENDIX D

Symbol List

Symbol List

Listed below by their FORTRAN names are some of the input quantities to the program and their equivalent names in Section 3.0.

Input Quantity	Symbol in Section 3.0
YM	E
PR	ν
GE	G
DENS	ρ
X	X
Y	Y
RSMASS	M_i
AR	A
XI	I
YJ	J
PTH	t
DX	D_x
DY	D_y
D1	D_1
DXY	D_{xy}
BETA	β

UNCLASSIFIED
Security Classification

DOCUMENT CONTROL DATA - R & D

(Security classification of title, body of abstract and indexing annotation must be entered when the overall report is classified)

1. ORIGINATING ACTIVITY (Corporate author)
HUGHES AIRCRAFT COMPANY, MISSILE SYSTEMS DIVISION
FALLBROOK AND ROSCOE BLVDS.
CANOGA PARK, CALIFORNIA 91304

2a. REPORT SECURITY CLASSIFICATION
UNCLASSIFIED

2b. GROUP

3. REPORT TITLE

COLLOCATION FLUTTER ANALYSIS STUDY

4. DESCRIPTIVE NOTES (Type of report and inclusive dates)
FINAL REPORT (MARCH 1968 THROUGH MARCH 1969)

5. AUTHOR(S) (First name, middle initial, last name)

DYNAMICS AND ENVIRONMENT SECTION, DONALD R. ULBRICH

6. REPORT DATE	7a. TOTAL NO. OF PAGES	7b. NO. OF REFS
APRIL 4, 1969		

8a. CONTRACT OR GRANT NO.	9a. ORIGINATOR'S REPORT NUMBER(S)
N00019-68-C-0247	
b. PROJECT NO.	
c.	9b. OTHER REPORT NO(S) (Any other numbers that may be assigned this report)
d.	

10. DISTRIBUTION STATEMENT
IN ADDITION TO SECURITY REQUIREMENTS WHICH APPLY TO THIS DOCUMENT AND MUST BE MET, EACH TRANSMITTAL OF THIS DOCUMENT OUTSIDE THE AGENCIES OF THE U.S. GOVERNMENT MUST HAVE PRIOR APPROVAL OF THE COMMANDER, NAVSC

11. SUPPLEMENTARY NOTES	12. SPONSORING MILITARY ACTIVITY
	NAVAL AIR SYSTEMS COMMANDS DEPARTMENT OF THE NAVY WASHINGTON, D.C.

13. ABSTRACT

THIS STUDY COVERS THE DEVELOPMENT OF A SET OF COMPUTER PROGRAM TO PERFORM FLUTTER ANALYSIS BY THE COLLOCATION METHOD. WHILE THIS METHOD HAS BEEN KNOWN FOR SOME TIME, ONLY RECENTLY HAVE ADVANCES IN COMPUTER TECHNOLOGY MADE THE METHOD TECHNICALLY AND FINANCIALLY FEASIBLE. THE INGREDIENTS OF A COLLOCATION FLUTTER ANALYSIS ARE 1) A FLEXIBILITY MATRIX, 2) AERODYNAMIC INFLUENCE COEFFICIENT MATRIX, AND 3) AN EIGENVALUE SOLUTION. THIS STUDY IS PRESENTED IN FOUR VOLUMES. VOLUME I CONTAINS A GENERAL PROGRAM DISCUSSION. VOLUME II CONTAINS THE PROGRAM FLUENC WHICH CALCULATES THE FLEXIBILITY MATRIX. VOLUME III CONTAINS A SET OF THREE PROGRAMS TO CALCULATE AERODYNAMIC INFLUENCE COEFFICIENTS FOR SUBSONIC, TRANSONIC, AND SUPERSONIC FLIGHT REGIMES. VOLUME IV CONTAINS THE PROGRAM COFA WHICH SETS UP AND SOLVES THE FLUTTER EIGENVALUE MATRIX.

END

DD FORM 1 NOV 65

TOTAL PAGES
TOTAL SHEETS
DOCUMENTS